Wrinkle Removal Systems

- WrinkleSTOP®
- Scroll Roll
- Adjusta-Pull®

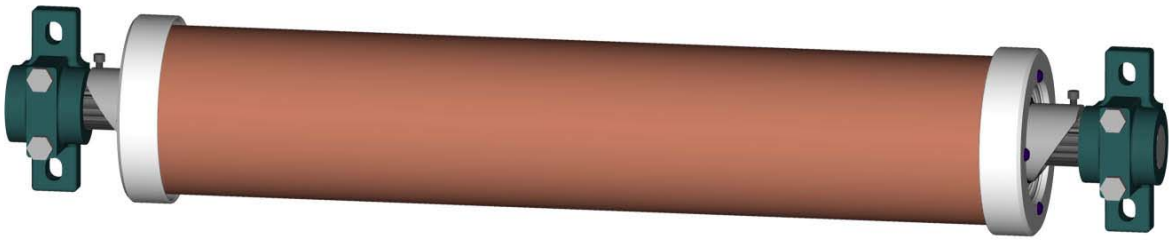

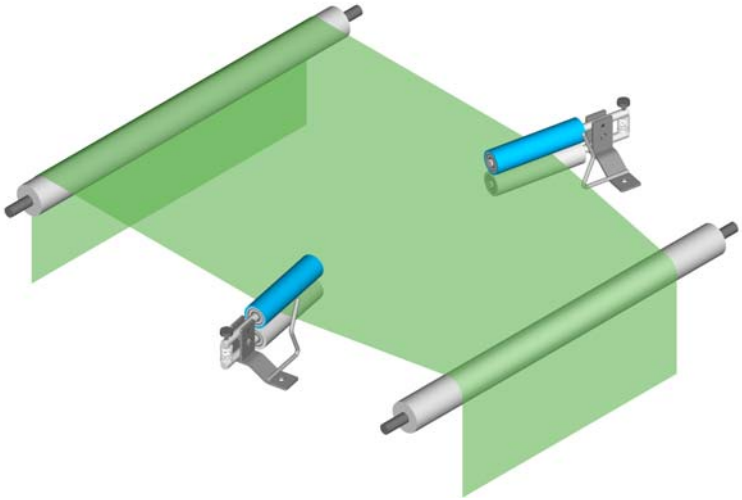

Multi-Adjust® WrinkleSTOP® No-Bow anti-wrinkle roll

Featuring field serviceable design and unique optimum spread adjust

"Only a few degrees short of perfection, expanding surface spreader rolls shine with thin gauge webs." Of all the wrinkle removal devices presented during a CEMA annual meeting in St. Paul Minnesota (presentation by a major corporation as part of an independent study), only expanding surface type rolls removed all of the wrinkles, all of the time. The presentation included curved axis rolls, metal grooved rolls, rubber grooved rolls, masking taped rolls, Teflon® taped rolls and tapered rolls.

Converter Accessory Corporation's patented WrinkleSTOP® and Multi-Adjust® WrinkleSTOP® are the only smooth surface, linear, adjustable, expanding surface rolls on the market.

Expanding Surface Rolls:

The only wrinkle removal system in a recent major independent presentation to remove all the wrinkles, all of the time!

Special Features and Benefits:

- Field serviceable design—reduces downtime
- The first and only spreader roll that features optimum spread adjust—you can adjust the spreading action for practically any converting application
- New rubber sleeve compound and manufacturing process—provides longer sleeve life
- New clamping mechanism—provides greater reliability
- Plus all of the features and benefits of the traditional WrinkleSTOP

WrinkleSTOP® and Multi-Adjust® WrinkleSTOP® work equally well on all types of materials:
Cloth • Paper • Foil • Film
Plastics • Nonwovens

How the WrinkleSTOP® works:

The WrinkleSTOP® anti-wrinkle roll surface is a stretchable rubber sleeve, supported by a series of rubber support disks. As the roll rotates, the sleeve expands for 180° and contracts 180°. The material enters the roll at the point where sleeve expansion begins and exits at a point prior to sleeve contraction. The result—the desired spreading action is achieved without distortion of the web.

The amount of spreading is controlled by two factors:
1. Wrap angle of material (180° maximum)
2. The angular displacement of the end caps

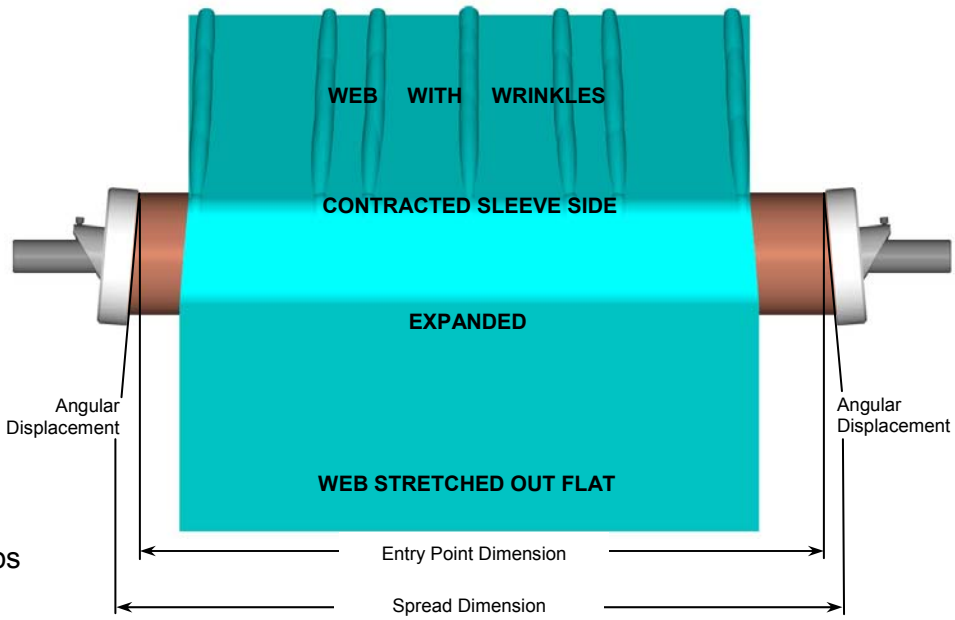

End caps may be independently adjusted while machine is in motion, providing total control of spreading action to match your requirements.

WrinkleSTOP® NO-BOW spreader roll

Featuring Zero-Web Distortion

"Finally, a spreader roll that doesn't tear or distort the web's center!"

WrinkleSTOP® and Multi-Adjust® WrinkleSTOP® work equally well on all types of materials:
Cloth • Paper • Foil • Film • Plastics • Nonwovens

Features and Benefits:

- **Bowless, smooth roll provides zero-web distortion**: Won't mark, stretch, introduce wrinkles into the web, or send non-level web into other level sensitive devices such as moisture or weight meters. Prevents stressed or torn web center areas and altered centerline travel.
- **Independent edge-to-edge adjustability while the web is in motion:** Degree of expansion can be quickly altered at each end cap, allowing correction of distortion produced at earlier points in the line. This provides total control of spreading action to match your requirements.
- **No special tools needed to adjust degree of spreading action:** Provides productive, cost-effective performance.
- **Works well in vacuum chambers and can be used to run in high-heat applications:** Provides highly reliable, productive performance.
- **Easy installation:** Directly replaces existing anti-wrinkle rolls or idlers.
- **Accepts and delivers web at any angle:** Saves space in your plant line, improves web runs, and allows replacement of existing limited-angle roll arrangements with fewer rolls.
- **Surface designed for high traction:** Stretchable rubber sleeve maintains high traction without surface glazing.
- **Works well with extremely short lead-in and lead-out web distances:** Increases productivity while saving space.
- **Drive sheave available:** Perfect for light webs.
- **Available in various diameters and widths:**
  3.25" Diameter up to 20" face width for up to 500 FPM
  5.5" Diameter up to 100" face width for up to 1000 FPM
  8" Diameter up to 200" face width for up to 3000 FPM
- **Versatile:** Can be designed to work in corrosive atmosphere applications, as well as food and pharmaceutical applications.
- **Static conductive roll face available**

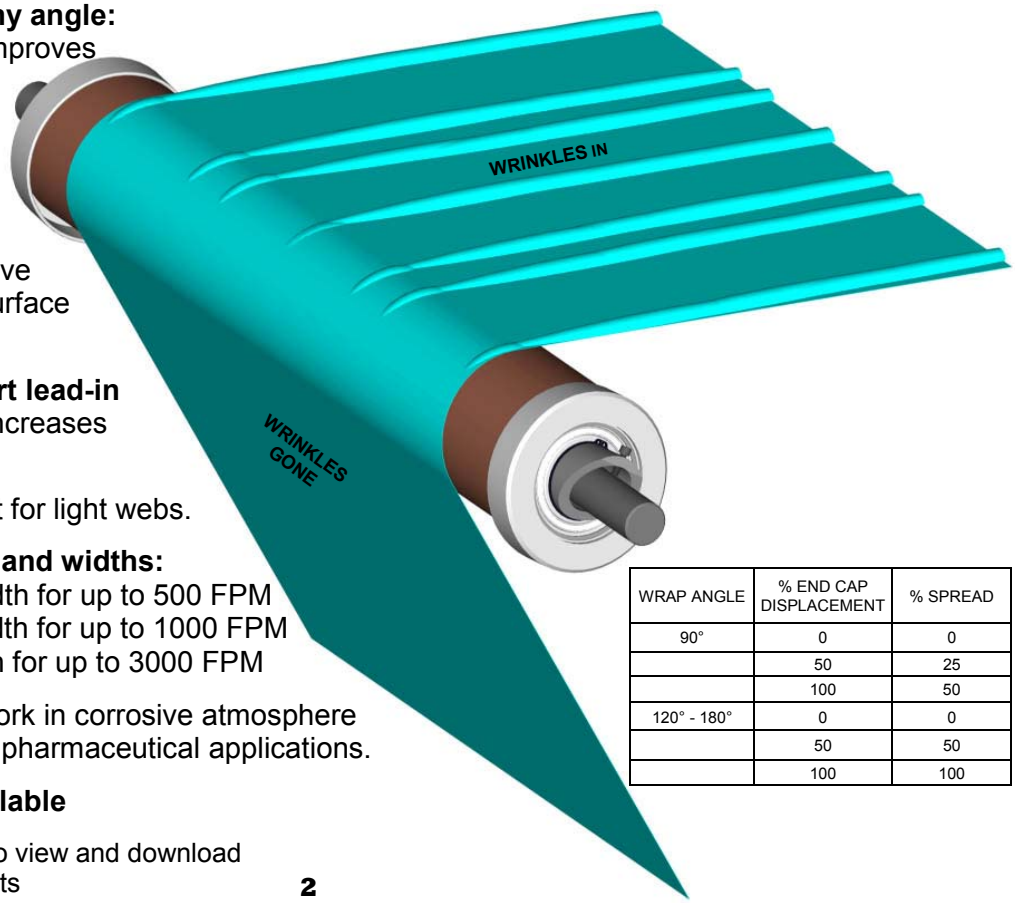

WRAP ANGLE	% END CAP DISPLACEMENT	% SPREAD
90°	0	0
	50	25
	100	50
120° - 180°	0	0
	50	50
	100	100

Visit www.converteraccessory.com to view and download specification sheets

Inside the WrinkleSTOP®

Surface remains smooth and linear (no-bow)

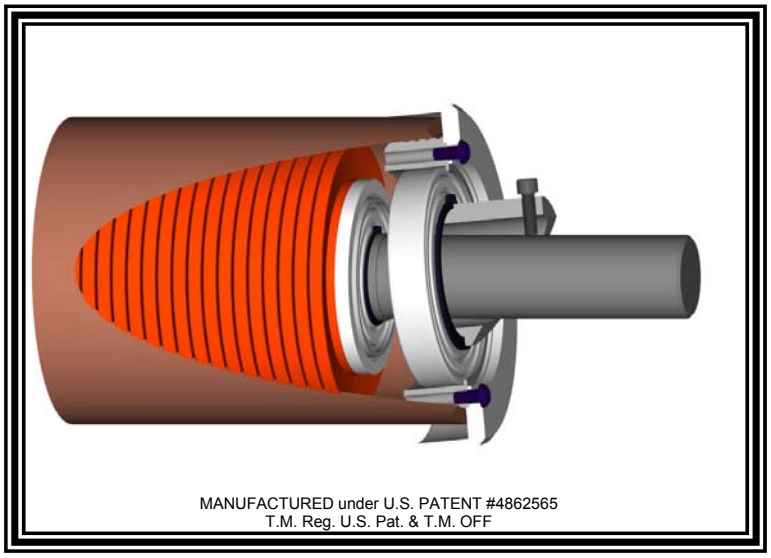

Adjustments:

- Are made from each end independently
- Can be made while web is in motion
- Are made with standard tools
- Are set from 0-100% spreading

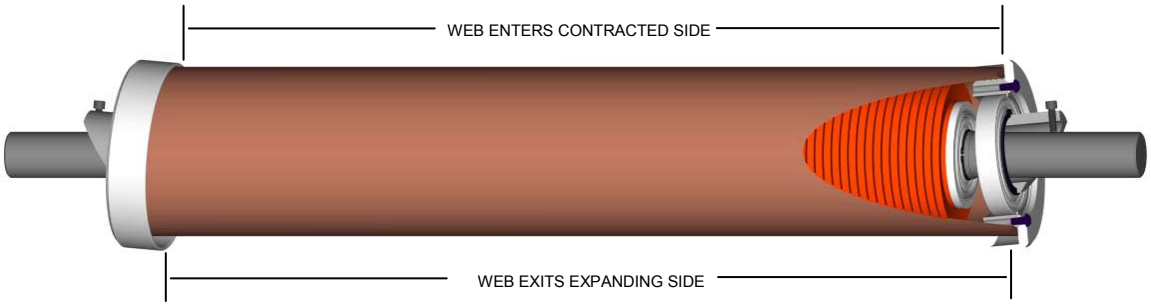

Web direction →

5.5” Diameter WrinkleSTOP®

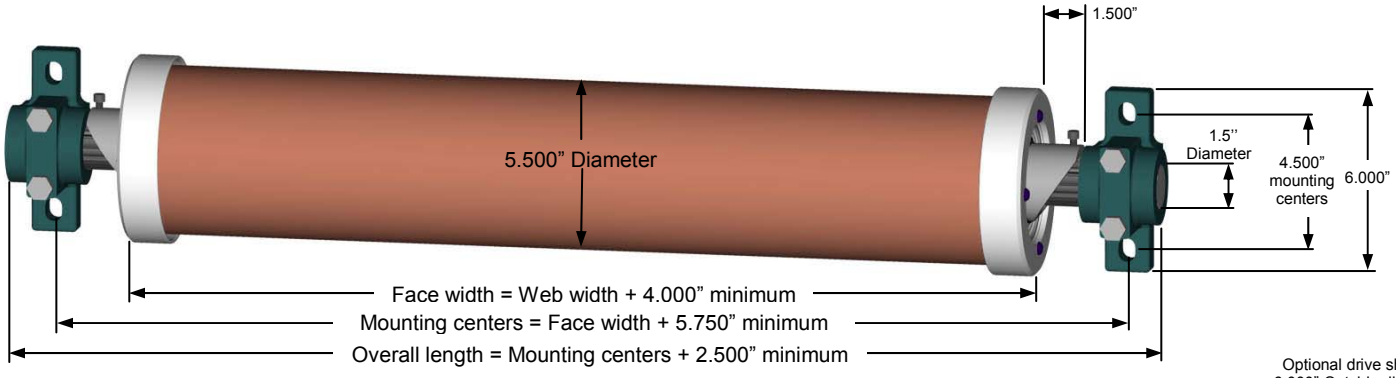

Design Parameters:

- Maximum roll face: 100” (96” web width)
- Maximum web speed: 1000 feet per minute
- Maximum web tension: 12 pounds per linear inch
- Minimum turning force: .25 pounds per linear inch
- Approximate roller weight: 13 pounds + 1.7 pounds per inch of face
- Dead shaft construction
- 50 Durometer neoprene sleeve

Options:

- Flange type mounting brackets
- Drilled and tapped ends
- Drive sheave
- Various sleeve materials

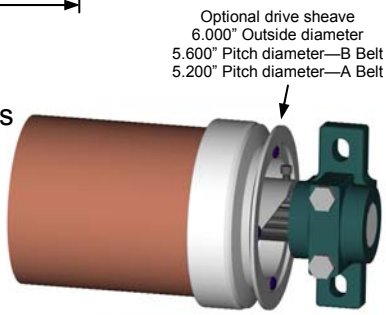

3.25” Diameter WrinkleSTOP®

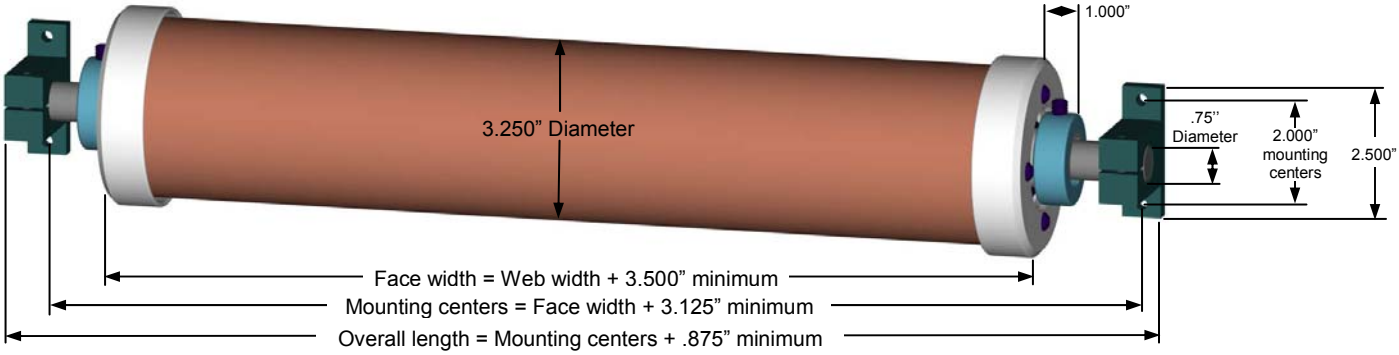

Design Parameters:

- Maximum roll face: 20” (16.5” web width)
- Maximum web speed: 500 feet per minute
- Maximum web tension: 4 pounds per linear inch
- Minimum turning force: .17 pounds per linear inch
- Approximate roller weight: 7 pounds + .75 pounds per inch of face
- Dead shaft construction
- 50 Durometer neoprene sleeve

Options:

- Flange type mounting brackets
- Drilled and tapped ends
- Drive sheave
- Various sleeve materials

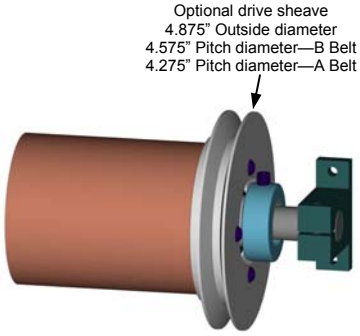

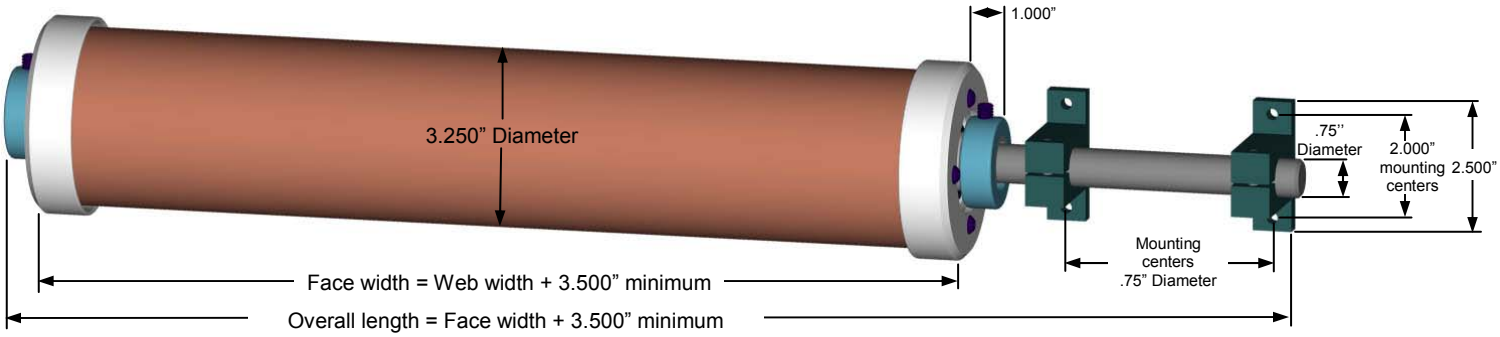

Visit www.converteraccessory.com to view and download specification sheets

5.5” Diameter Multi-Adjust WrinkleSTOP®

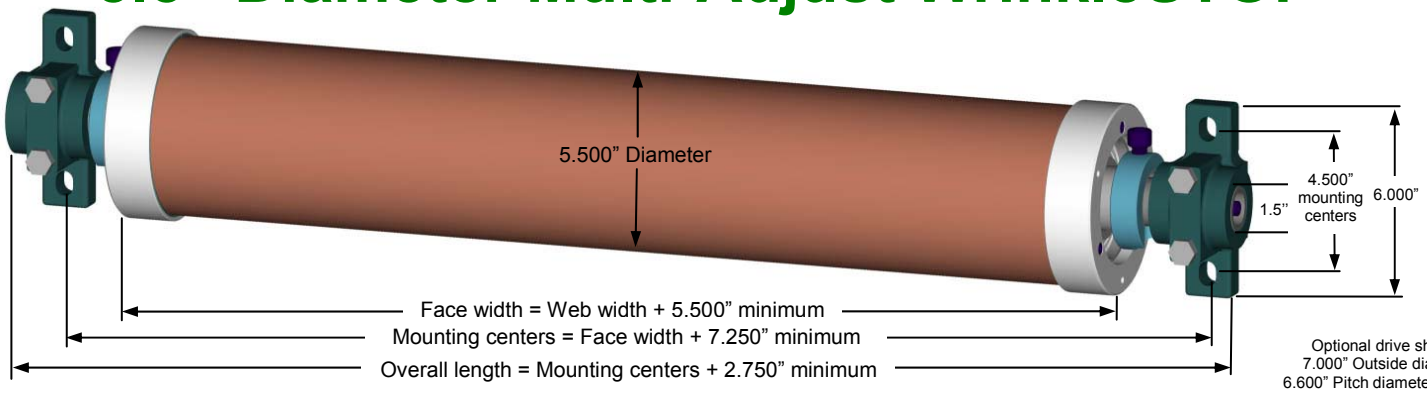

Design Parameters:

- Maximum roll face: 100” (94.5” web width)
- Maximum web speed: 1000 feet per minute
- Maximum web tension: 12 pounds per linear inch
- Minimum turning force: .25 pounds per linear inch
- Approximate roller weight: 13 pounds + 1.7 pounds per inch of face

Options:

- Flange type mounting brackets
- Drive sheave
- Various sleeve materials

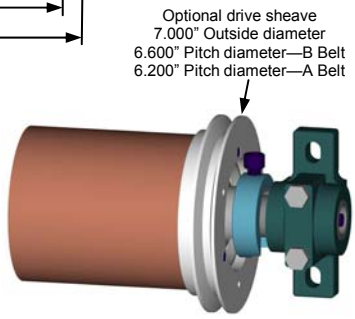

3.25” Diameter Multi-Adjust WrinkleSTOP®

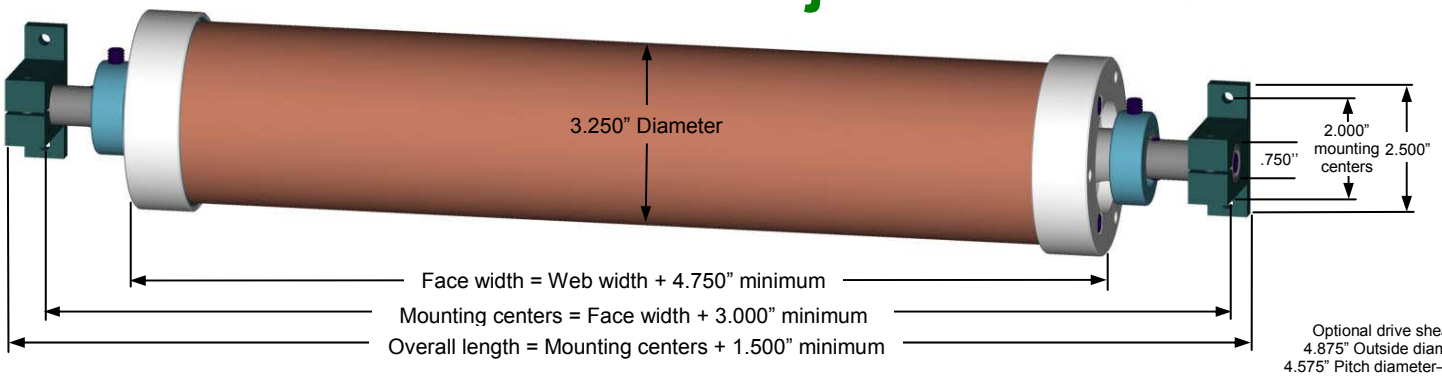

Design Parameters:

- Maximum roll face: 20” (15.25” web width)
- Maximum web speed: 500 feet per minute
- Maximum web tension: 4 pounds per linear inch
- Minimum turning force: .17 pounds per linear inch
- Dead shaft construction
- 50 Durometer neoprene sleeve

Options:

- Flange type mounting brackets
- Drive sheave
- Various sleeve materials

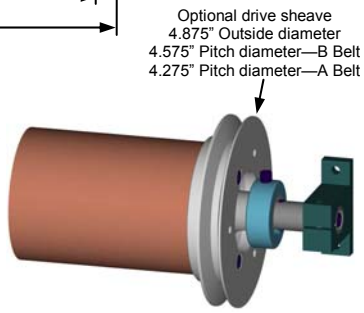

8” Diameter Multi-Adjust WrinkleSTOP®

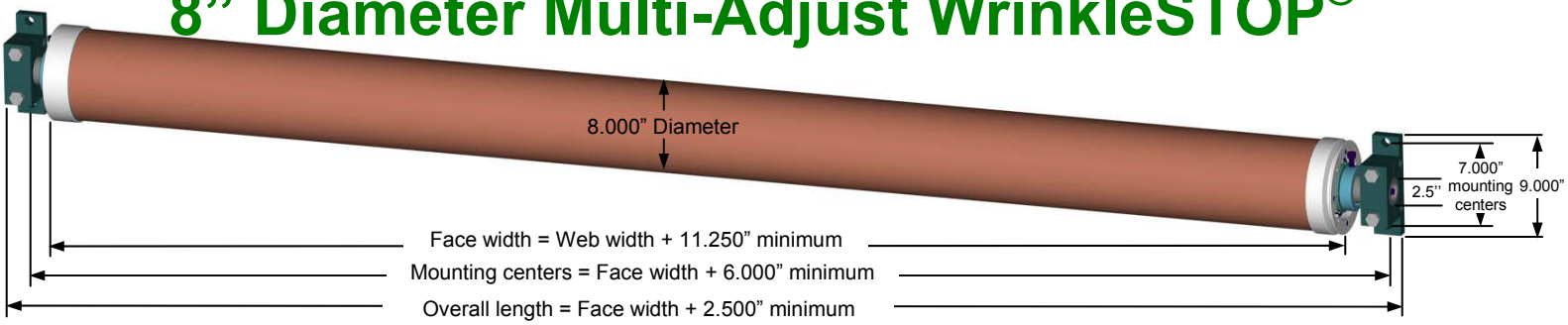

Design Parameters:

- Maximum roll face: 200” (188” web width)
- Maximum web speed: 3000 feet per minute
- Maximum web tension: 12 pounds per per inch of face
- Minimum turning force: .25 pounds per linear inch
- Dead shaft construction
- 50 Durometer neoprene sleeve
- Approximate roller weight: 75 pounds + 3.8 pounds per linear inch

Options:

- Flange type mounting brackets
- Various sleeve materials

Adjusta-Pull® Nip Type Spreaders

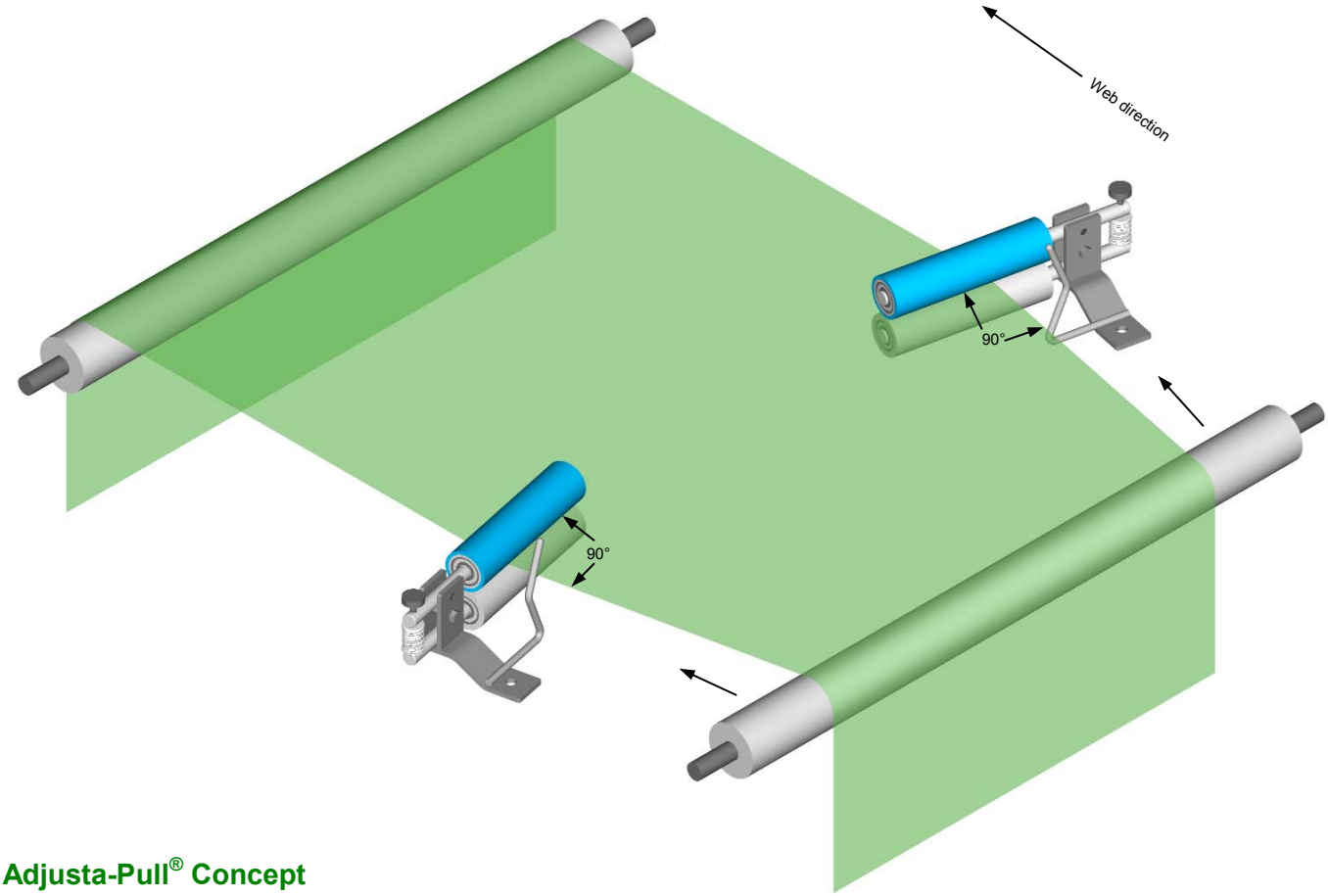

The Adjusta-Pull® Concept

The Adjusta-Pull® web spreading system is a remarkably efficient and cost effective method for wrinkle removal and web spreading. This system works based on the web handling principal—**a web will seek to be perpendicular to a roll in its entry span to that roll.**

Adjusta-Pull® assemblies include two nip roll assemblies. Each nip assembly consists of two 9” face (6” face is also available), 2.25” diameter rolls. The standard design includes one roll in each nip assembly to be rubber covered (assemblies are available with both rolls rubber covered). Each of the nip assemblies are mounted on each edge of the web and each nip assembly keeps each of the webs edges in traction with each nip assembly.

When the nip assemblies are angled away from each other, each of the webs edges will try to maintain a 90 degree angle to each nip assembly. So this spreading device effectively and aggressively pulls on each edge of your web to remove wrinkles. Increasing the angular displacement of each nip assembly increases the web spreading action. The greater the angular displacement of each nip assembly the greater the spreading.

- Effectively and aggressively remove wrinkles from any web
- Amount of spreading is easily adjustable
- Nip pressure adjustment
- Simple, rugged steel design
- Rolls use two ball bearing system
- Quick delivery
- Installation in under 15 minutes

Visit www.converteraccessory.com/products/wrinkle/ap.html
to view and download specification sheets

Scroll Roll

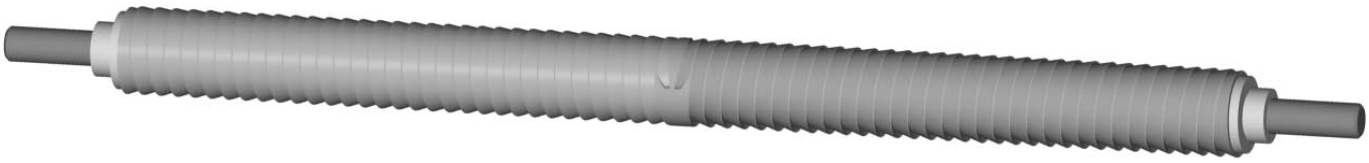

Multi-Lead Scroll Roll

CAC's Scroll Roll utilizes long lead threads, leading from the center out toward each edge of the roll face. There are four standard thread forms available: 1 start / .375" lead, 2 starters / .750" lead, 4 starts / 1.500" lead and 8 starts / 3.00" lead. The number of leads dictates the aggressiveness of the roll, more leads means more aggressiveness. However, 4 starts / 1.500" lead is our most popular model.

Scroll rolls are used with all types of materials. They are extremely useful when used as an idler roll in high speed applications where air entrainment between web to roller face is a problem. Scroll rolls can be used as dead bars or non synchronous driven rolls for extremely aggressive anti-wrinkle performance.

Scroll rolls are available in aluminum (standard), steel and stainless steel. Available coating / plating includes chrome, anodize, nickel and plasma.

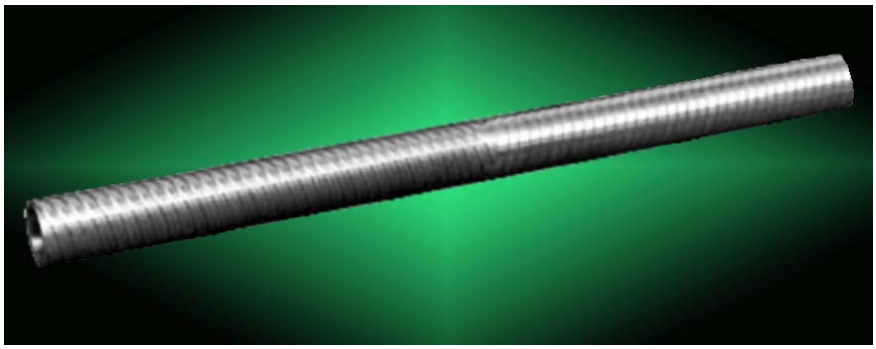

Visit www.converteraccessory.com/products/wrinkle/scroll.html
to view and download specification sheets

CONVERTER ACCESSORY CORPORATION
201 Alpha Road, Wind Gap, PA 18091-1279

•800-433-2413 •610-863-6008 •800-709-1007 FAX •610-863-7818 FAX
www.converteraccessory.com Email: cac@epix.net

Web Handling Technology . . . CAC Engineered and Manufactured