Slitting Systems

Shear Cut Edge Trim Assembly

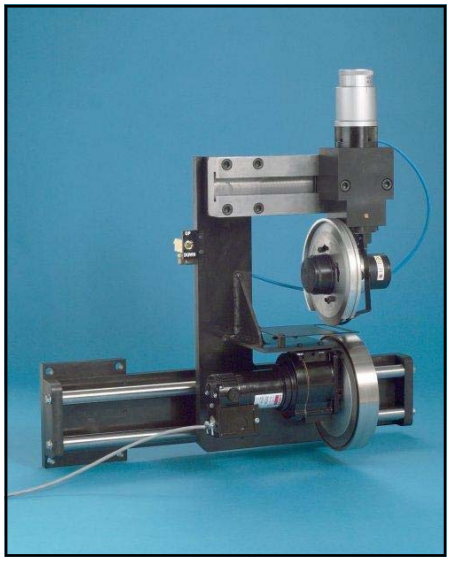

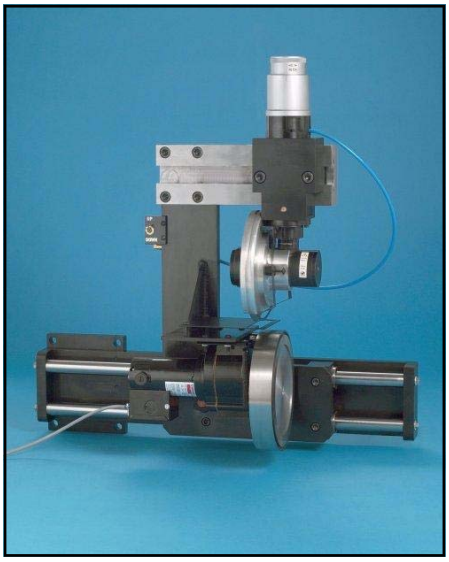

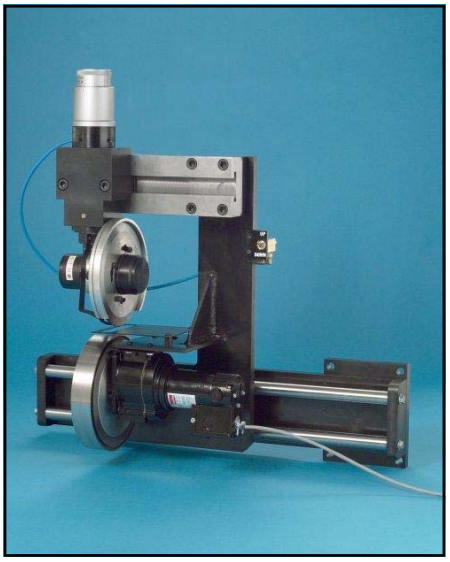

- Top and bottom blades are mounted on one assembly to provide simultaneous movement
- Top blade has automatic air operated side loading
- Bottom blade can be driven
- Used for shear cut slitting applications
- Ideal for use with all types of materials
- Compact design
- Fits in any location on existing equipment
- Easy installation—four mounting holes
- No special framework or customer modifications required
- Carriage travel can accommodate narrow to wide web width variations
- Can be used with existing trim removal system
- Integral CAC pneumatic trim removal systems are available

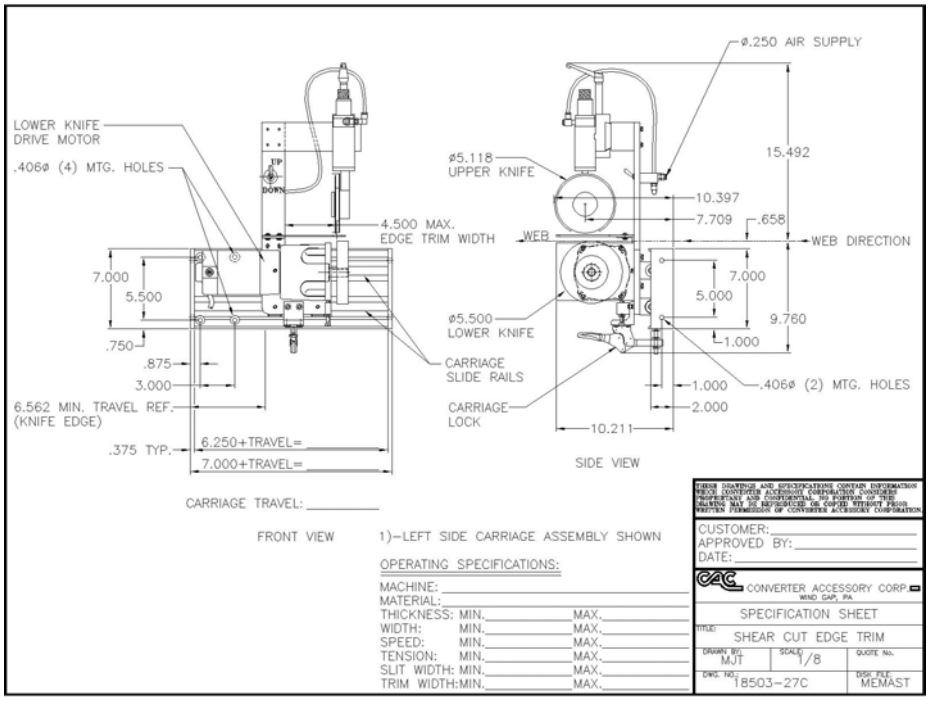

Inline Slitting Assembly

- Ideal for all web-fed converting equipment
- Can incorporate a web guide for increased web accuracy
- For use with all types of materials
- Simple operation-manual adjustments for easy centering of blade to grooved bottom roll or knives
- Custom designed for individual requirements
- Constructed of structural steel weldments for maximum strength and rigidity
- Easily retrofits to existing equipment
- Specially designed mounting frame facilitates installation, operation and maintenance
- Cost effective

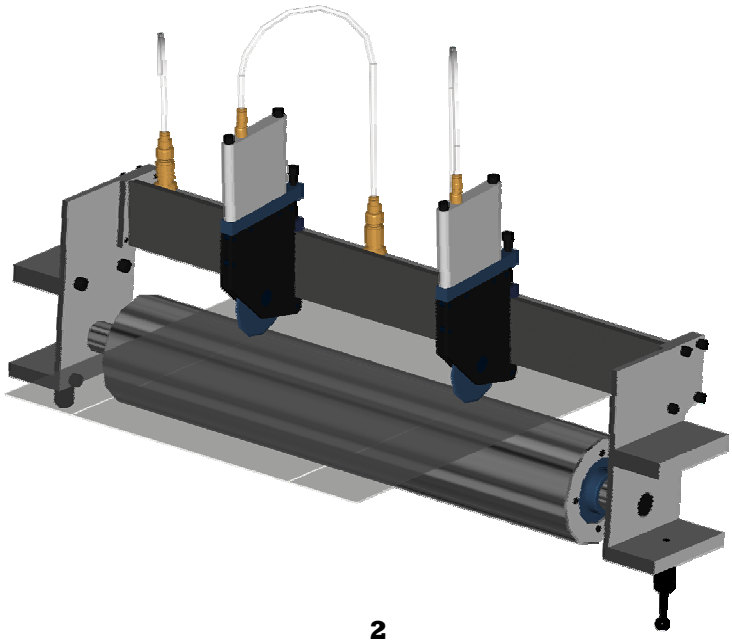

Since 1974

Tried, tested and reliable products for the web-fed industry

- **Air shafts and chucks - www.cor-lok.com**
- **Pneumatic trim and matrix removal systems**
  www.foxtrimaway.com
- **Shaft support systems - www.simplok.com**
- **Wrinkle removal systems - www.cacwrinklestop.com**
- **Unwind / rewind systems**
  www.converteraccessory.com/products/roll_support
- **Modular slitting systems**
  www.converteraccessory.com/products/slitting
- **Brakes and clutches**
  www.converteraccessory.com/products/related/brake
- **Roll Handling**
  www.converteraccessory.com/products/roll_lifting
- **Dancer Roll Assemblies**
  www.converteraccessory.com/products/dancer
- **Slitting - www.converteraccessory.com/products/slitting**
- **Idlers - www.converteraccessory.com/products/related/mainidler**
- **Custom Equipment**
  www.converteraccessory.com/products/related

Visit us at www.converteraccessory.com/salesrep
for your local sales representative or
contact us direct

CONVERTER ACCESSORY CORPORATION
201 Alpha Road, Wind Gap, PA 18091-1279
www.converteraccessory.com
Email: cac@epix.net

•800-433-2413 •610-863-6008
•800-709-1007 •610-863-7818 FAX

Web Handling Technology . . . CAC Engineered and Manufactured