Rollers and Roller Assemblies

- Idler Rolls
- Dancer Roll Assembly
- Nip Roll Assembly
- S-Wrap Feed Roll Assembly
- Heated Roll

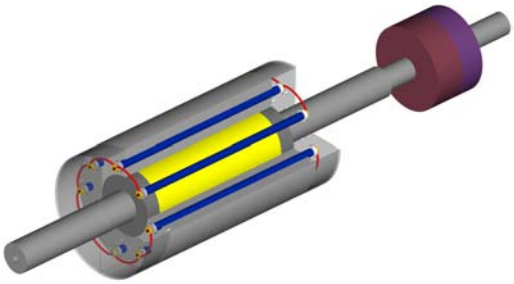

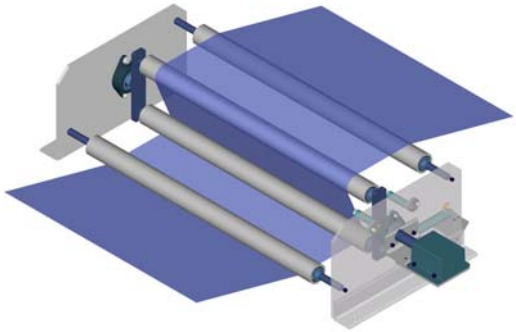

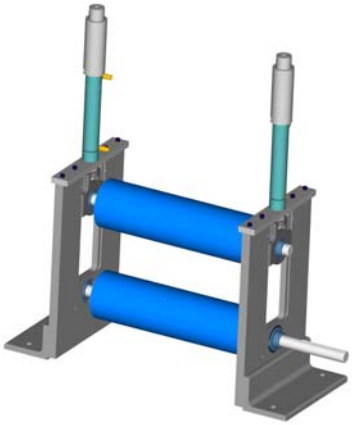

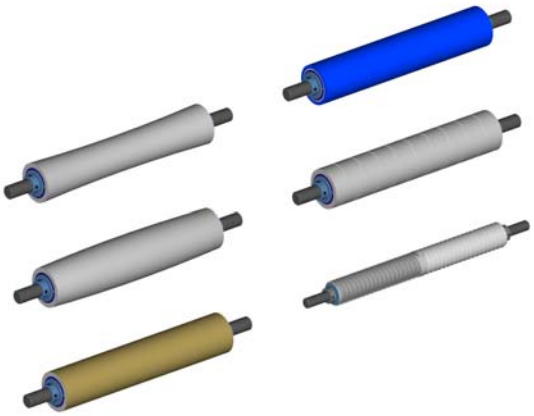

2” Diameter Dead Shaft Idler Roll

Specifications:

- Diameter: 2” Outside diameter (nominal)
- Available materials: .250” Wall aluminum
  .250” Wall steel
  .250” Wall stainless steel
- Outside diameter turned and polished
- Balanced
- Low friction bearings
- Available coatings: Rubber
  Plasma
  Chrome
  Anodize
- Available machining: Crown
  Reverse crown
  Drilled and tapped thru shaft ends
  Various groove pattern
  Knurling

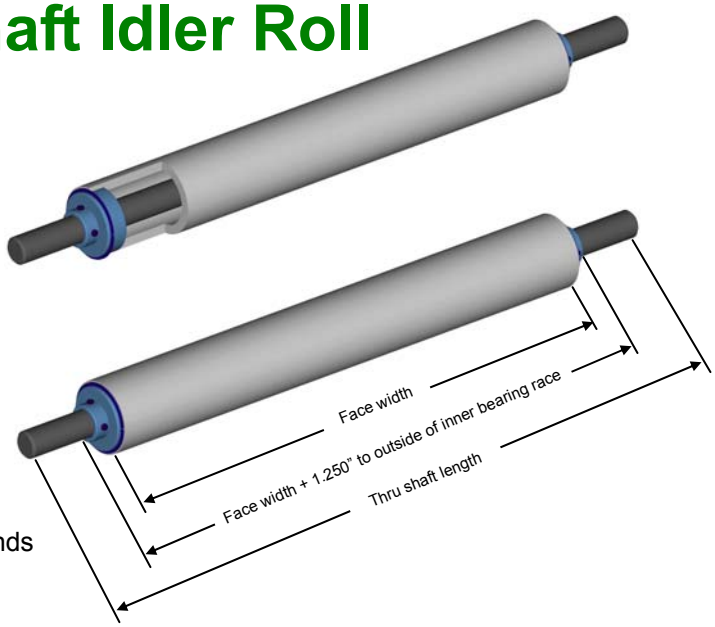

2.5” Diameter Dead Shaft Idler Roll

Specifications:

- Diameter: 2.5” Outside diameter (nominal)
- Available materials: .250” Wall aluminum
  .250” Wall steel
  .250” Wall stainless steel
- Outside diameter turned and polished
- Balanced
- Low friction bearings
- Available coatings: Rubber
  Plasma
  Chrome
  Anodize
- Available machining: Crown
  Reverse crown
  Drilled and tapped thru shaft ends
  Various groove pattern
  Knurling

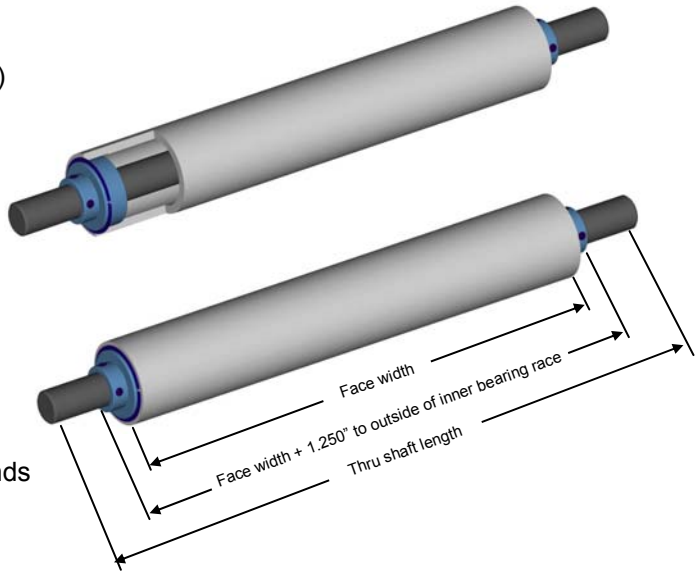

3” Diameter Dead Shaft Idler Roll

Specifications:

- Diameter: 3” Outside diameter (nominal)
- Available materials: .250” Wall aluminum
  .187” Wall steel
  .187” Wall stainless steel
  .500” Hollow wall aluminum
  (WINertia™ engineered shape*)
- Outside diameter turned and polished
- Balanced
- Low friction bearings
- Available coatings: Rubber
  Plasma
  Chrome
  Anodize
- Available machining: Crown
  Reverse crown
  Drilled and tapped thru shaft ends
  Various groove pattern
  Knurling

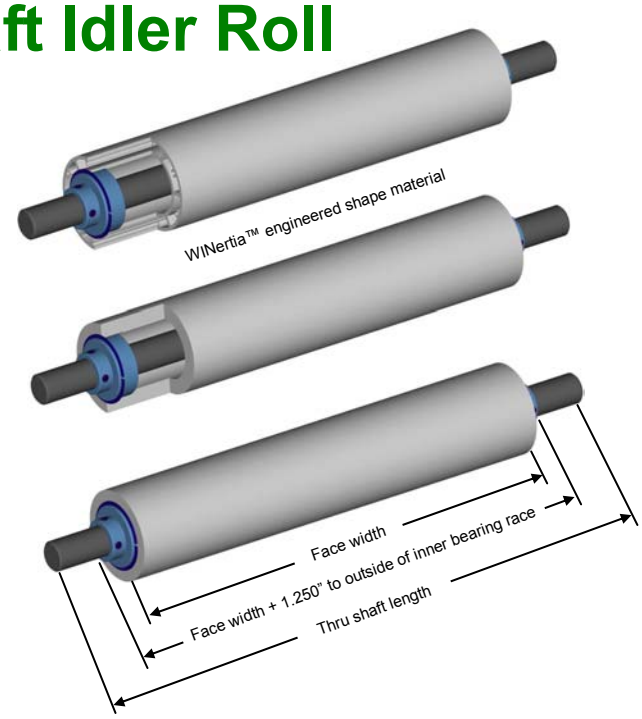

* WINertia™ engineered shape materials provides 10% - 30% less rotational inertia and momentum. WINertia™ is a registered trademark of Componex Corporation.

3.5” Diameter Dead Shaft Idler Roll

Specifications:

- Diameter: 3.5” Outside diameter (nominal)
- Available materials: .500” Wall aluminum
  .187” Wall steel
  .187” Wall stainless steel
- Thru shaft diameter 1.5” Stock (not machined)
- Outside diameter turned and polished
- Balanced
- Low friction bearings
- Available coatings: Rubber Plasma
  Chrome Anodize
- Available machining: Crown
  Reverse crown
  Drilled and tapped thru shaft ends
  Various groove pattern
  Knurling

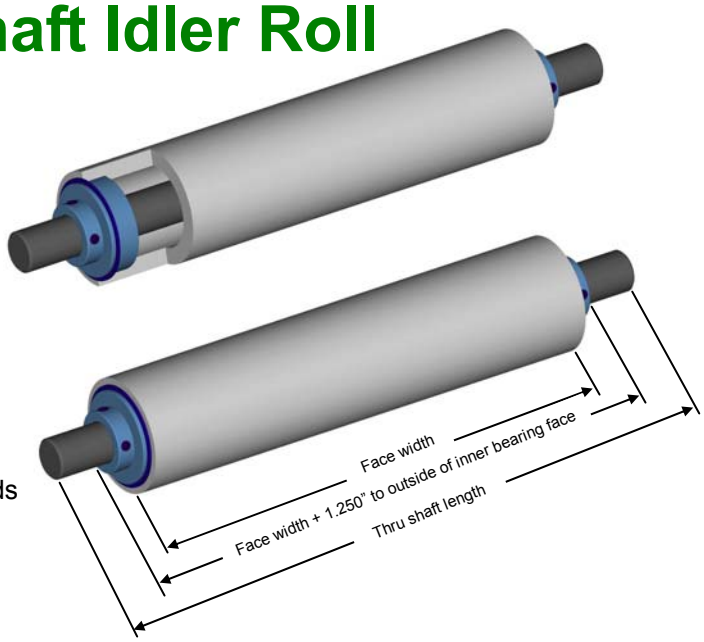

4” Diameter Dead Shaft Idler Roll

Specifications:

- Diameter: 4” Outside diameter (nominal)
- Available materials: .500” Wall aluminum
  .250” Wall steel
  .250” Wall stainless steel
  .5” Hollow wall aluminum
  (WINertia™ engineered shape*)
- Thru shaft diameter: 1.5” Stock (not machined)
- Outside diameter turned and polished
- Balanced
- Low friction bearings
- Available coatings: Rubber Plasma
  Chrome Anodize
- Available machining: Crown
  Reverse crown
  Drilled and tapped thru shaft ends
  Various groove pattern
  Knurling

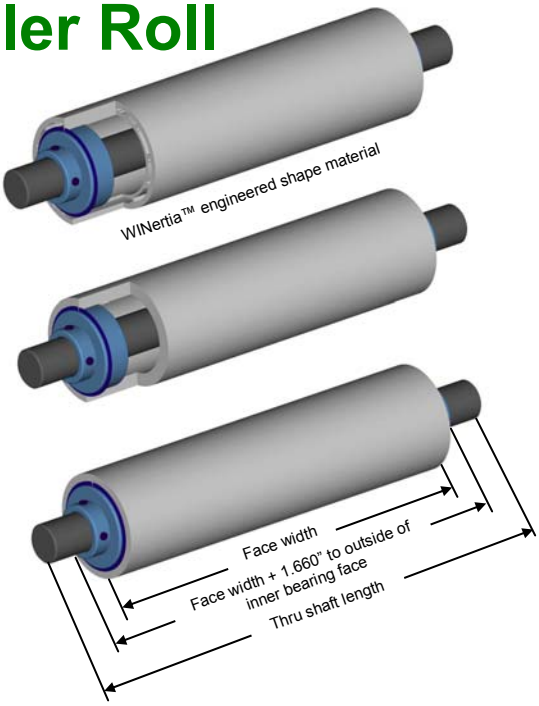

4.5” Diameter Dead Shaft Idler Roll

Specifications:

- Diameter: 4.5” Outside diameter (nominal)
- Available materials: .500” Wall aluminum
  .250” Wall steel
  .250” Wall stainless steel
- Thru shaft diameter: 1.5” Stock (not machined)
- Outside diameter turned and polished
- Balanced
- Low friction bearings
- Available coatings: Rubber Plasma
  Chrome Anodize
- Available machining: Crown
  Reverse crown
  Drilled and tapped thru shaft ends
  Various groove pattern
  Knurling

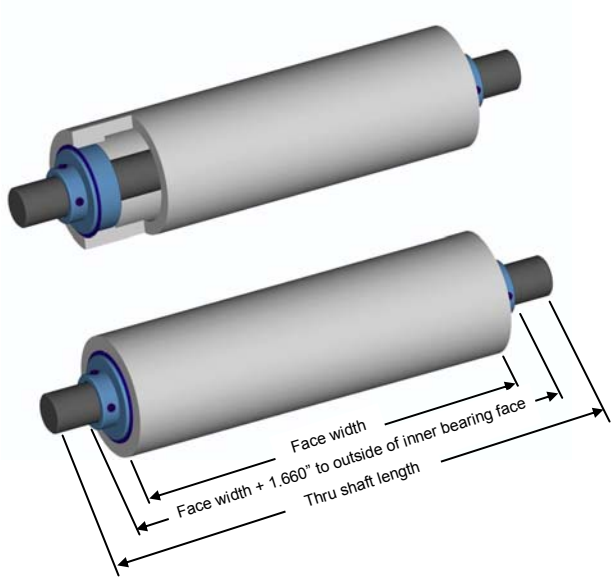

5” Diameter Dead Shaft Idler Roll

Specifications:

- Diameter: 5” Outside diameter (nominal)
- Available materials: .500” Wall aluminum
  .310” Wall steel
  .310” Wall stainless steel
  1” Hollow wall aluminum
  (WINertia™ engineered shape*)
- Thru shaft diameter 1.5” Stock (not machined)
- Outside diameter turned and polished
- Balanced
- Low friction bearings
- Available coatings: Rubber, Plasma, Chrome, Anodize
- Available machining: Crown
  Reverse crown
  Drilled and tapped thru shaft ends
  Various groove pattern
  Knurling

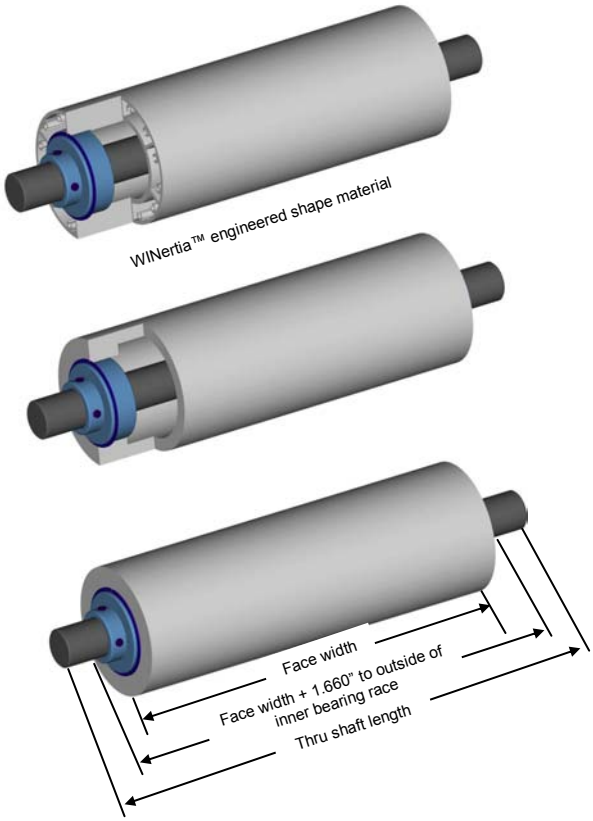

6” Diameter Dead Shaft Idler Roll

Specifications:

- Diameter: 6” Outside diameter (nominal)
- Available materials: .500” Wall aluminum
  .310” Wall steel
  .310” Wall stainless steel
  1.5” Hollow wall aluminum
  (WINertia™ engineered shape*)
- Thru shaft diameter 1.5” Stock (not machined)
- Outside diameter turned and polished
- Balanced
- Low friction bearings
- Available coatings: Rubber, Plasma, Chrome, Anodize
- Available machining: Crown
  Reverse crown
  Drilled and tapped thru shaft ends
  Various groove pattern
  Knurling

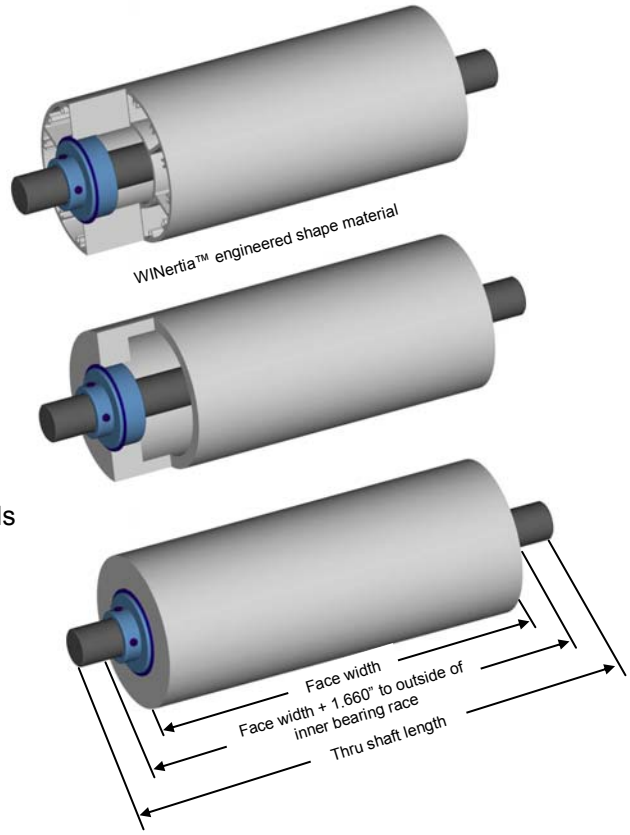

* WINertia™ engineered shape material provides 10%-30% less rotational inertia and momentum. WINertia™ is a registered trademark of Componex Corporation.

8” Diameter Dead Shaft Idler Roll

Specifications:

- Diameter: 8” Outside diameter (nominal)
  7.5” Outside diameter WINertia™ material (nominal)
- Available materials: .5” Wall aluminum
  .5” Wall steel
  .5” Wall stainless steel
  2.25” Hollow wall aluminum (WINertia™ engineered shape*)
- Thru shaft diameter 2” Stock (not machined)
  1.5” Stock (not machined) with WINertia™ material
- Outside diameter turned and polished
- Balanced
- Low friction bearings
- Available coatings: Rubber, Plasma, Chrome, Anodize
- Available machining: Crown
  Reverse crown
  Drilled and tapped thru shaft ends
  Various groove pattern
  Knurling

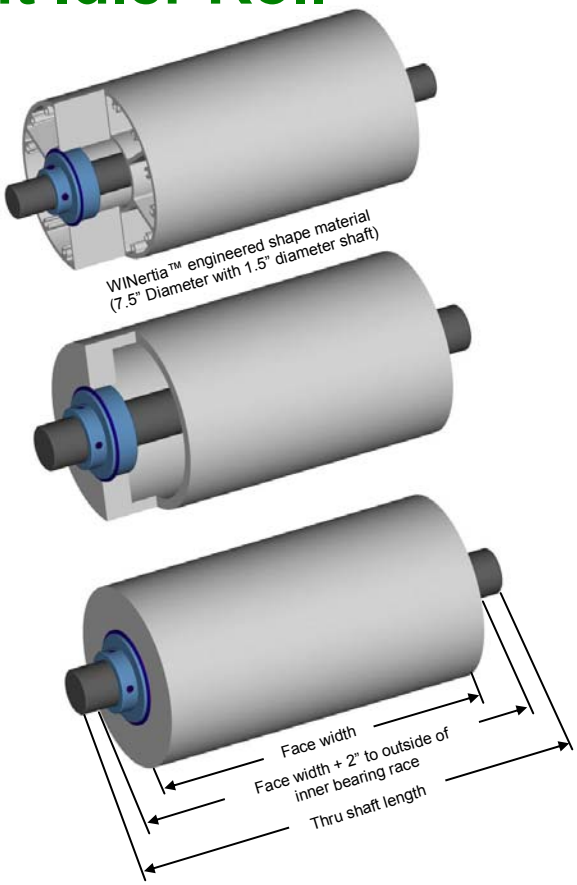

Multi-Heater Cartridge Electrically Heated Rolls

CAC’s multi-heater cartridge electrically heated roll offers unequalled accuracy and controllability. This heated roll is designed with multiple heater cartridges, powered by a slip ring. The heating radius of each cartridge is overlapped, so heat delivered by your web is controlled within the tolerances your application requires.

Multi-Heater Cartridge Electrically Heated Roll
Cutaway and Internal View

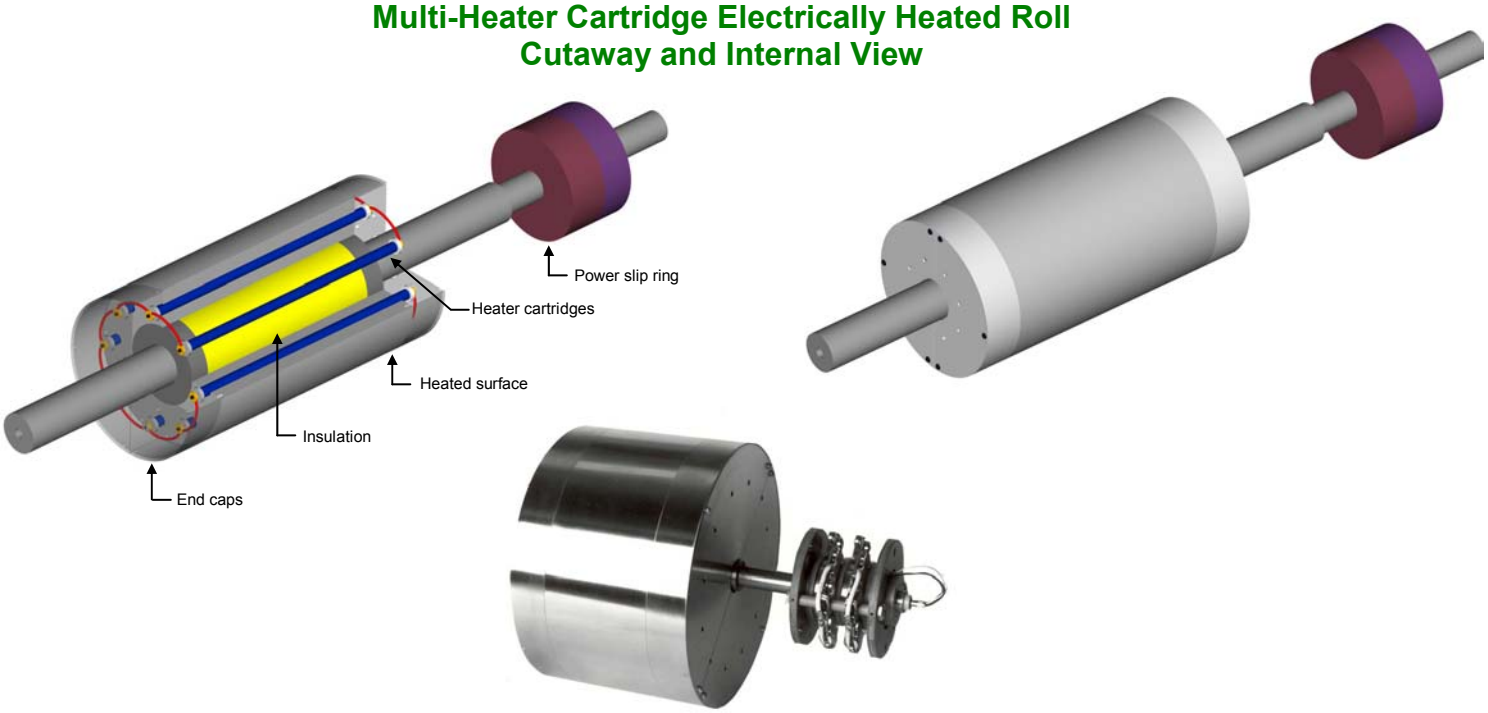

Rotational Type Dancer Roll Assembly

CAC's Rotational Type Dancer Roll Assembly is the perfect answer where closed loop, stable tension control is desired. This system is supplied with potentiometer or non contact position sensing for integration into dancer control systems or drive systems. This system works extremely well for very low to high tension and speed ranges.

Single Pass, Rotational Type Dancer

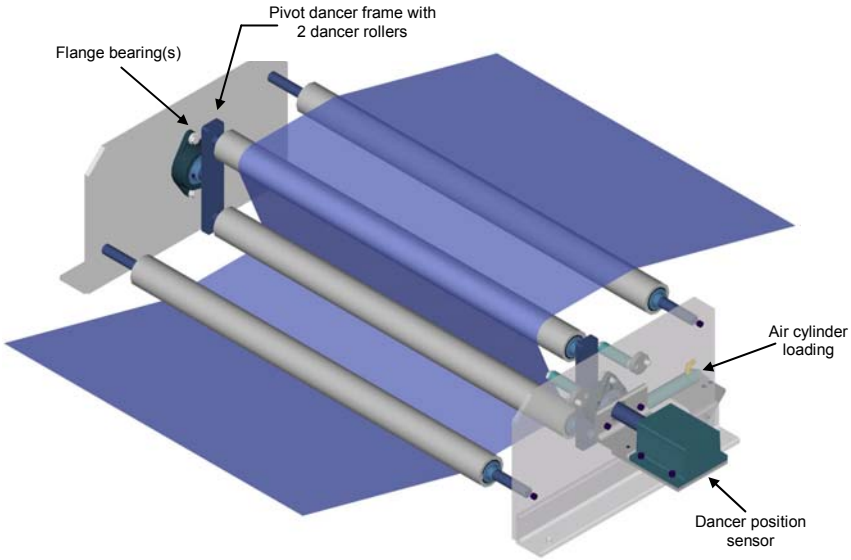

Dual Pass Rotational Type Dancer

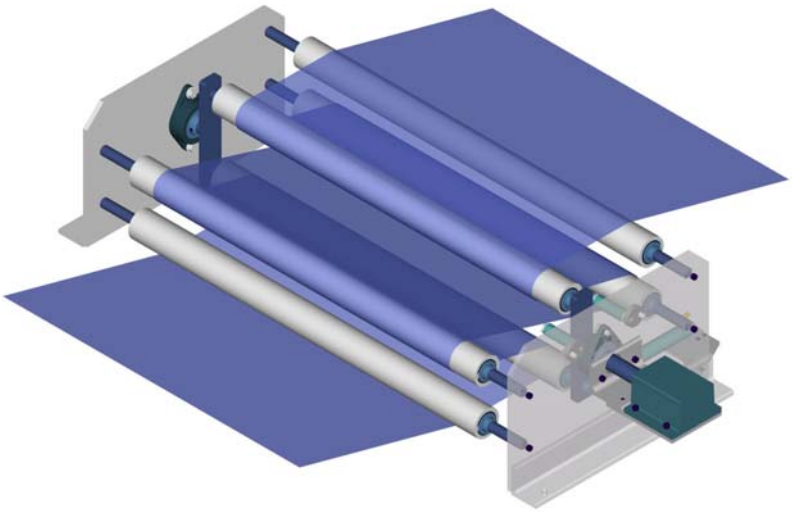

15" of Material Storage (shown without guards for clarity)

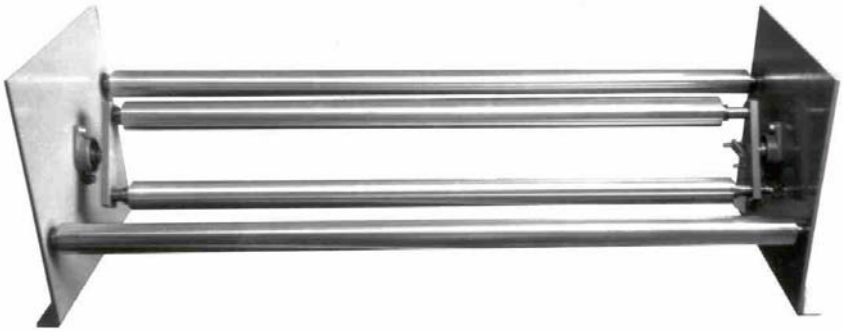

Nip Roll and S-Wrap Feed Roll Assembly

Nip roll and S-Wrap feed roll assemblies from CAC are effective options where web tension zones must be established. Both nip and S-Wrap feed rolls are available with roller coverings and machining.

Nip Roll Assembly

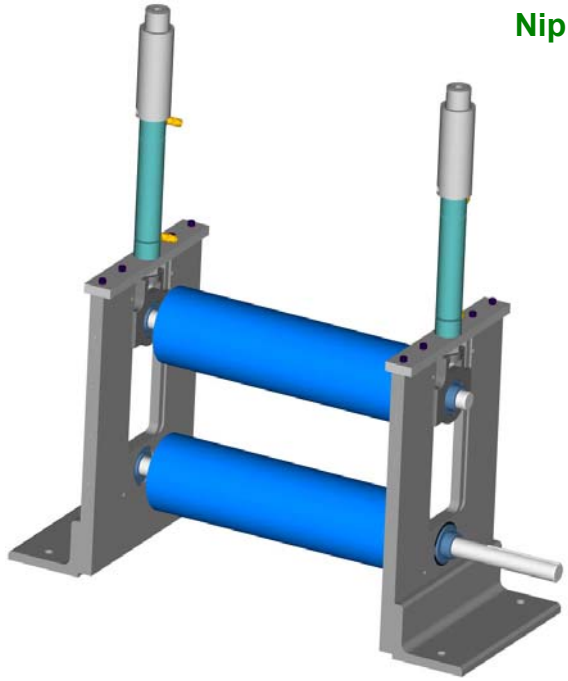

(shown without guards for clarity)

S-Wrap Feed Roll Assembly

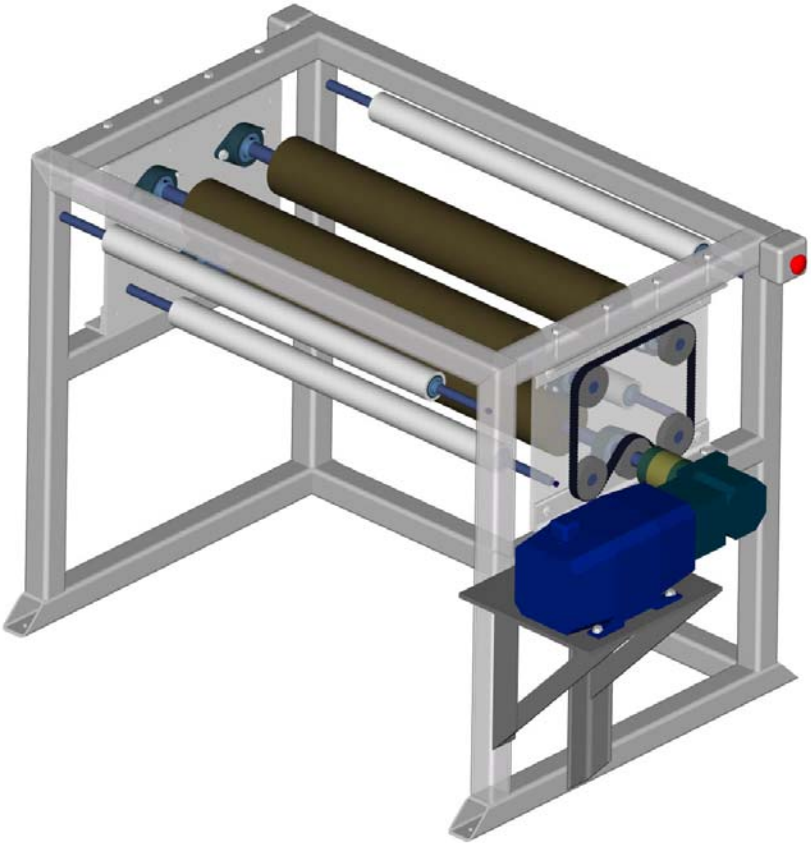

(shown without guards for clarity)

Machining Patterns and Coatings

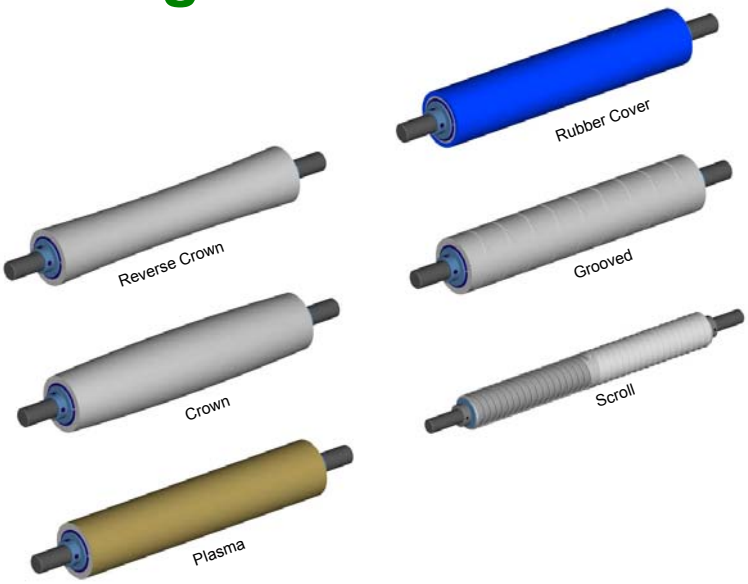

Standard Mounting Block

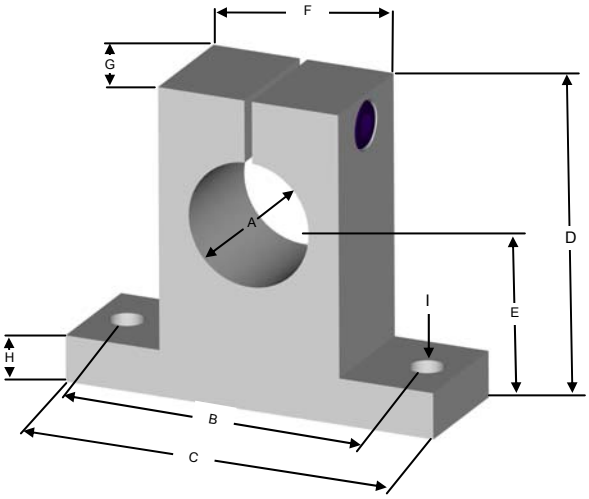

Standard Mounting Block Dimensions								
A	B	C	D	E	F	G	H	I
0.75	2.00	2.75	2.125	1.25	1.00	0.75	0.313	#10
1.00	2.50	3.25	2.563	1.50	1.375	1.000	0.375	0.25
1.25	3.00	4.00	3.00	1.75	1.75	1.125	0.438	0.313
1.50	3.50	4.75	3.50	2.00	2.00	1.25	0.50	0.313
2.00	4.50	6.00	4.50	2.50	2.625	1.50	0.625	0.375
All dimensions in inches								

CONVERTER ACCESSORY CORPORATION
201 Alpha Road, Wind Gap, PA 18091-1279
•800-433-2413 •610-863-6008 •800-709-1007 FAX •610-863-7818 FAX