ROLL SUPPORT SYSTEMS

DESIGNED AND MANUFACTURED BY

ROLL SUPPORT SYSTEMS

UNWIND, REWIND STANDS

Converter Accessory Corporation custom designs and manufactures unwind / rewind stands to meet individual specifications. Custom designing each stand insures that our customers get the best suited equipment for their application.

The “Building Block” concept starts with two basic pedestals to which any or all our web accessories can be added.

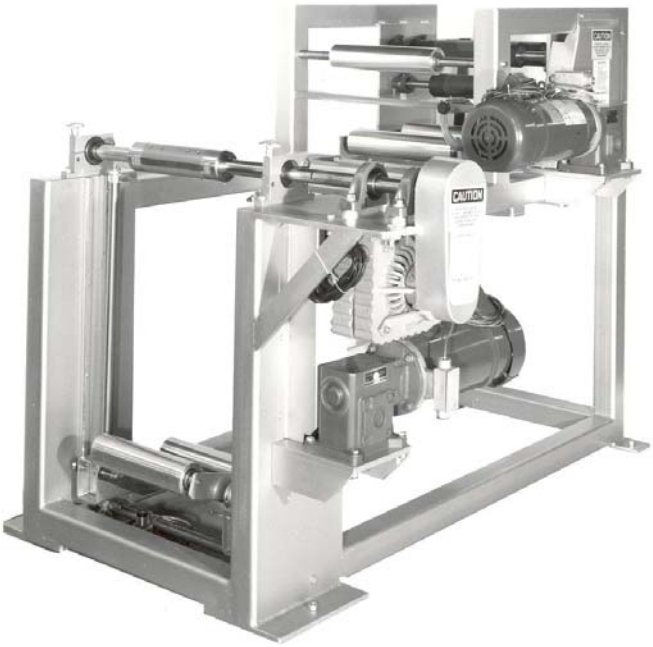

UNWIND / REWIND STAND

Features & Benefits of all CAC stands

- Accommodate a wide range of roll diameters and widths
- Available in cantilevered design for narrow, lightweight rolls
- Dual pedestal stands for wider, heavier rolls
- Ideal for all web-fed converting equipment
- Designed to easily retrofit to existing equipment
- Utilize anti-friction ball bearings to insure proper tension control
- Constructed of structural steel weldments for maximum strength and rigidity
- Minimum maintenance
- Customer specified edge / line guide controls, tension controls, etc. can be easily

DUAL STATION UNWIND STAND WITH TENSION CONTROL

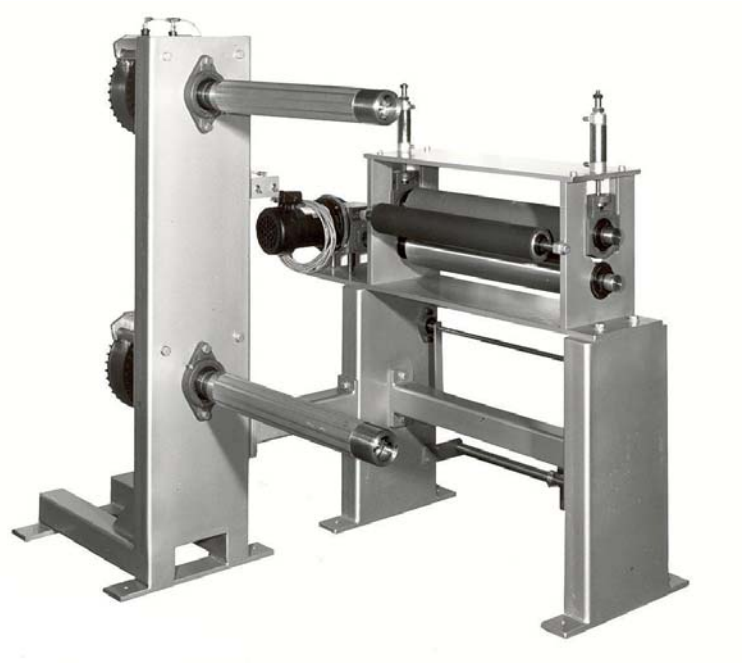

DUAL STATION CANTILEVERED UNWIND STAND

- Any desired width
- Any diameter
- Cantilevered stands for narrow, light weight rolls
- Dual pedestal stands for wider, heavier rolls (up to 1,000 lbs.)
- Constructed of structural steel weldments for maximum strength and rigidity

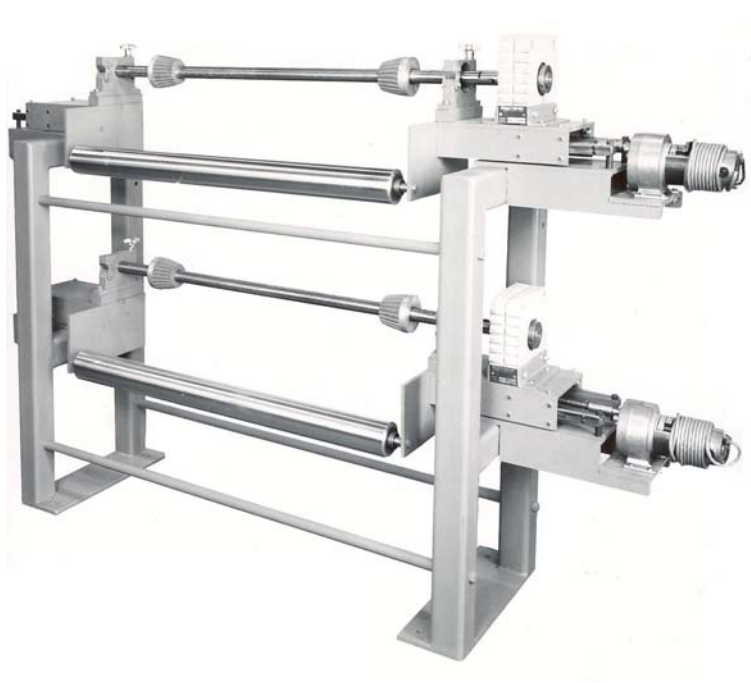

DUAL STATION GUIDED UNWIND

- Dual station increase productivity – minimizes floor space
- Customer specified edge / line guide controls, tension controls, etc. can be easily incorporated into design
- Superior accuracy eliminates material waste
- Independent guiding of each station for maximum flexibility
- Accommodates web widths up to 60”
- Accommodates shaft sizes up to 1-1/4” maximum
- Utilizes heavy duty, anti-friction ball bearings
- Air operated brake provides smooth tension control (manual brakes alsoavailable)
- Constructed of structural steel weldments for maximum strength and rigidity
- Compact design. Only the unwind stations (shaft and idler) are guided. . not the entire frame
- Minimum maintenance

CUSTOM BUILT STANDS

DESIGNED AND MANUFACTURED BY

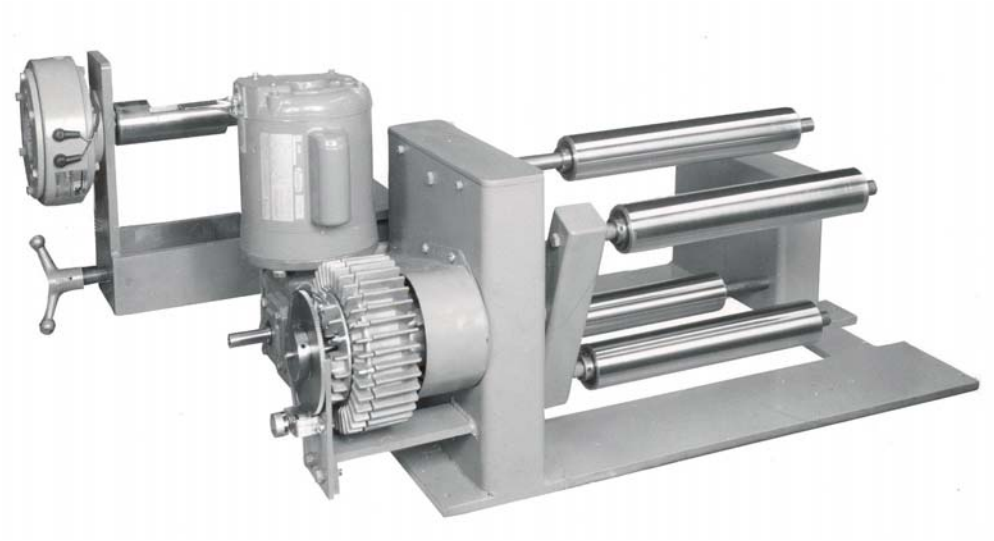

LOW PROFILE UNWIND STAND with DANCER

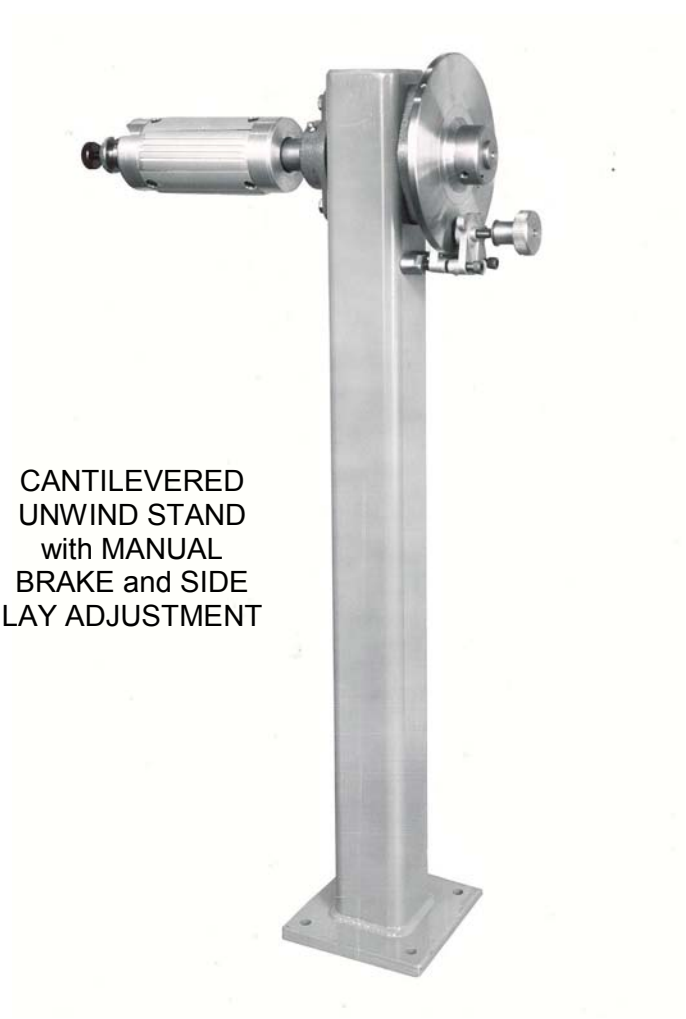

CANTILEVERED UNWIND STAND with MANUAL BRAKE and SIDE LAY ADJUSTMENT

CANTILEVERED SPECIAL UNWIND / REWIND STAND

SINGLE STATION
UNWIND / REWIND STAND

SINGLE STATION REWIND STAND
with “S” WRAP FEED ROLLS and
ACCUMULATOR ASSEMBLY

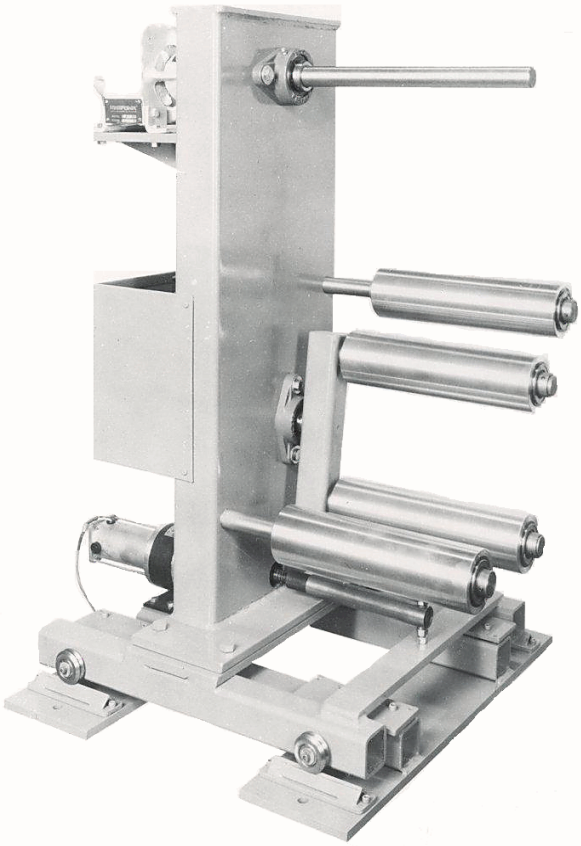

CANTILEVERED UNWIND
STAND with DANCER ROLL
CONTROL

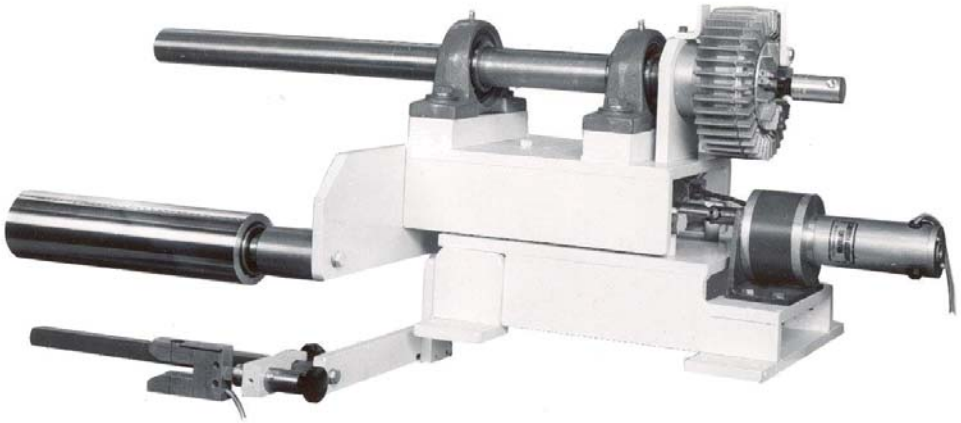

CANTILEVERED UNWIND STAND
with EDGE GUIDE

“BUILDING BLOCK” COMPONENTS AVAILABLE FROM CAC:

- **CORE SUPPORT SYSTEMS**
  (air chucks & shafts, mechanical chucks, cones)
- **SHAFT SUPPORT SYSTEMS**
  (shaft holders with drive, brake, skew, lateral, or edge guiding modifications)
- **PNEUMATIC CONVEYING SYSTEMS**
  (Fox TrimAway® trim and matrix removal systems)
- **WRINKLE REMOVAL SYSTEMS**
  (scroll roll, nip type spreaders, WrinkleSTOP® spreader rolls)

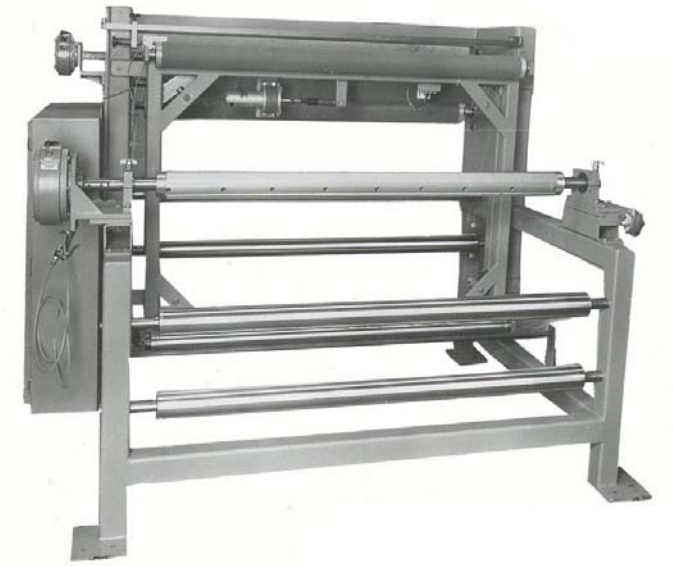

SINGLE STATION UNWIND STAND
with INTERMEDIATE WEB GUIDE

SPECIAL EQUIPMENT

COMPLETE ACCESSORY SYSTEMS

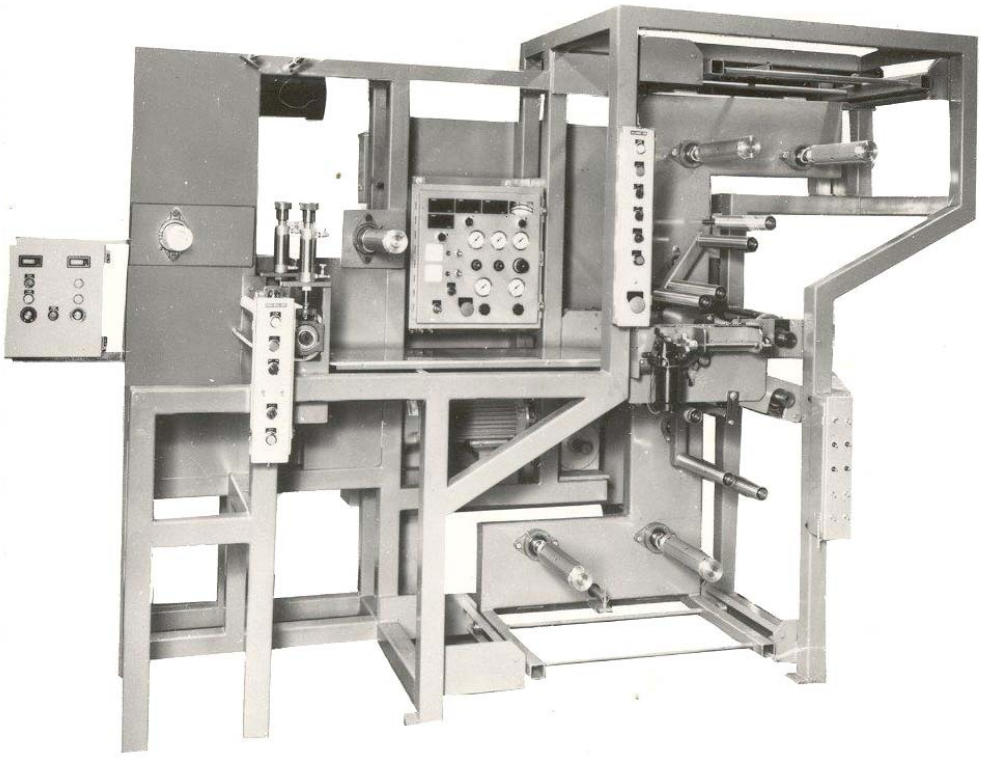

NARROW WIDTH ACCESSORY SYSTEM

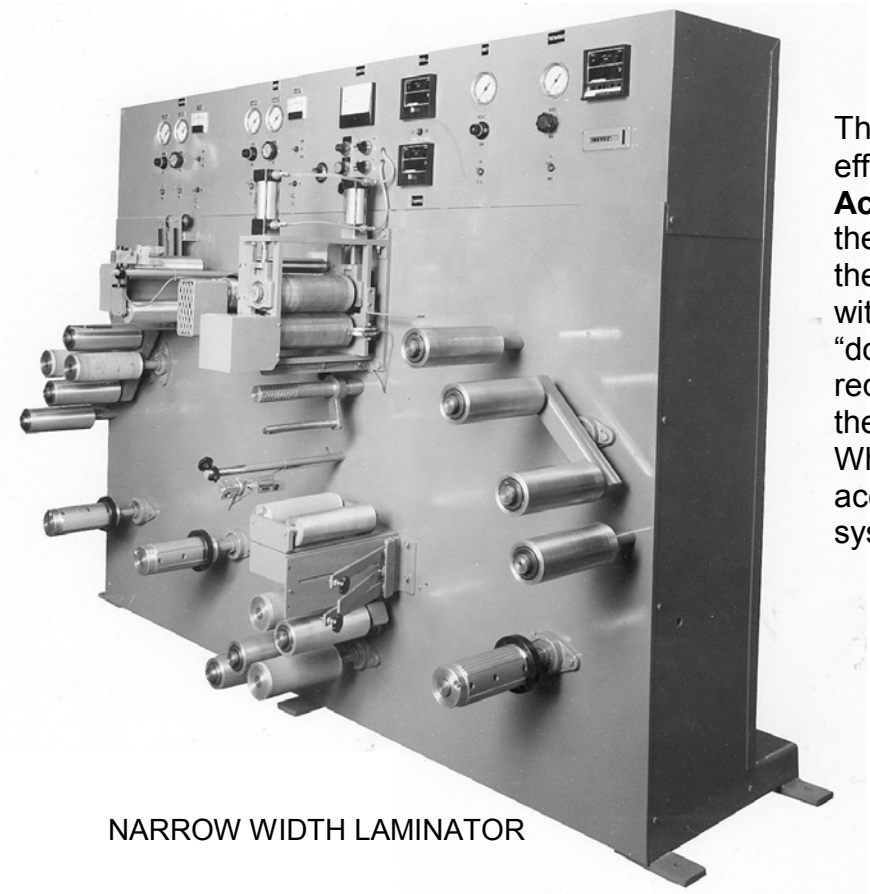

NARROW WIDTH LAMINATOR

These Accessory / System packages effectively demonstrate how **Converter Accessory Corporation** meets not only the needs of the web-fed industry. . but the individual requirements of companies within the industry. Whatever *your* specific “downstream” (or upstream or midstream) requirements are, you can turn to CAC for the productive, cost-effective solution! Whether it’s for a single, standard web accessory device. . or total accessory system.

201 Alpha Road
Wind Gap, PA 18091
Phone: 800-433-2413 • 610-863-6008
Fax: 800-709-1007 • 610-863-7818
Email: cac@epix.net
Website: www.handleyourweb.com

Rev 52510