Web Handling

Product Brochure

- Air Shafts & Chucks
- Anti-Wrinkle Systems
- Trim Removal Systems
- Safety Chucks
- Shaft Holders
- Roll Handling
- Unwind & Rewind Stands
- Rollers & Roller Assemblies
- Brakes
- Slitting

Converter Accessory Corporation

201 Alpha Road
Wind Gap, PA 18091-1279

Phone: 800-433-2413 / 610-863-6008
Fax: 800-709-1007 / 610-863-7818
www.converteraccessory.com
Email: cac@epix.net

MADE IN USA

COR-LOK® Air Shafts ▪ Air Chucks ▪ Mechanical Chucks ▪ Core Cones ▪ Core Adapters

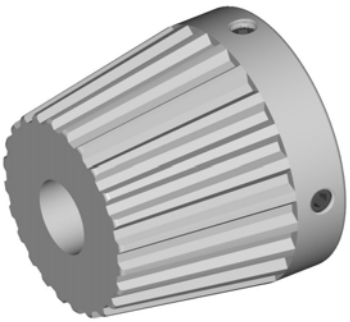

Core cones—great for crushed cores

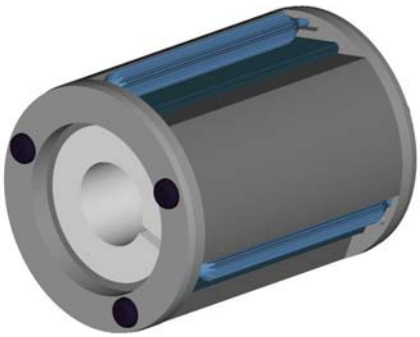

Auto-locking mechanical chucks

Lateral adjust on the fly

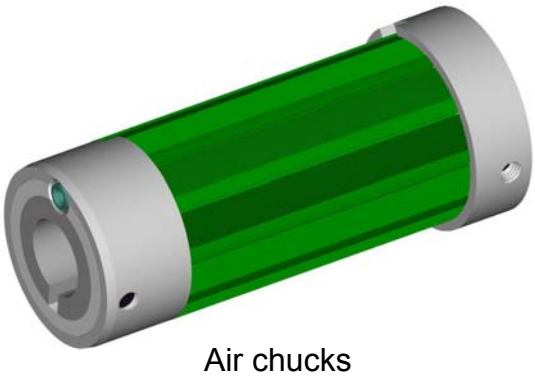

Air chucks

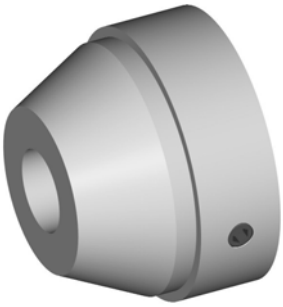

End Plugs

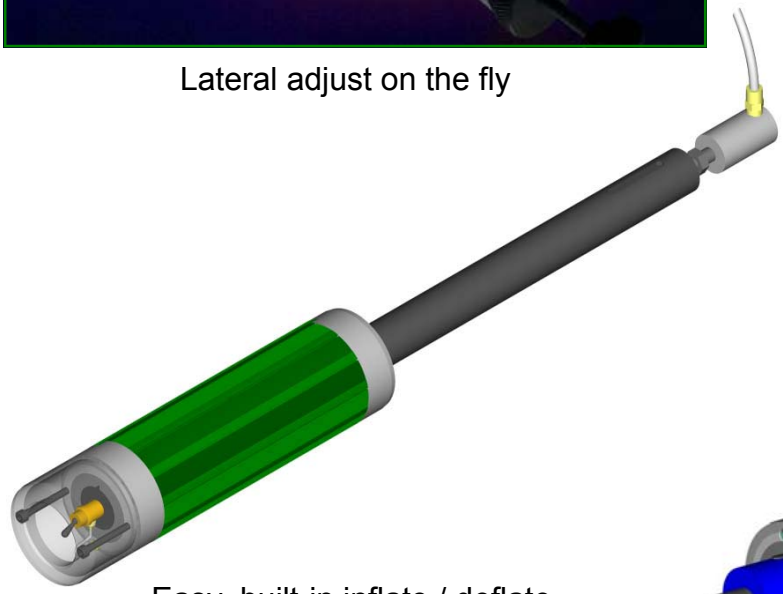

Easy, built-in inflate / deflate

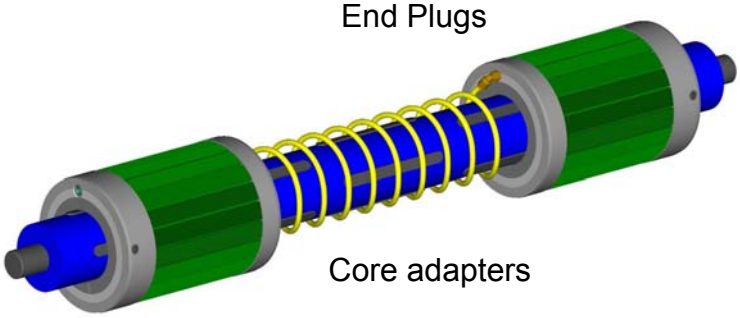

Core adapters

Anti-Wrinkle Systems
WrinkleSTOP® Smooth, No-Bow Rolls
Adjusta-Pull® Nip ▪ Scroll Roll Grooved Roll

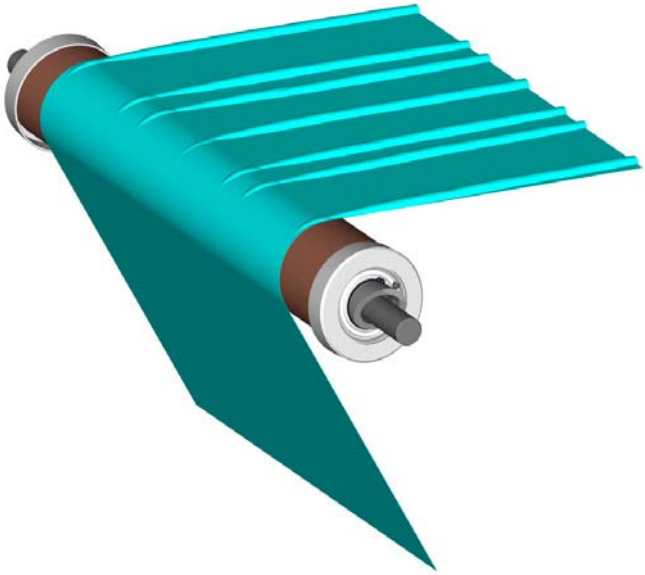

WrinkleSTOP® Smooth Surface,
No-Bow Anti-Wrinkle Rolls

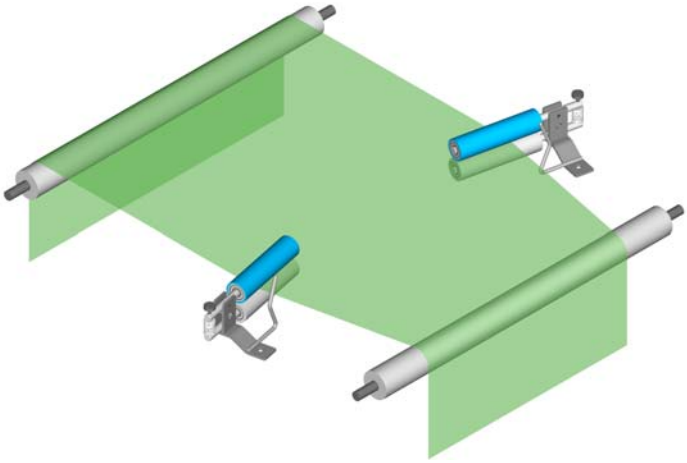

Scroll Roll Grooved Roll

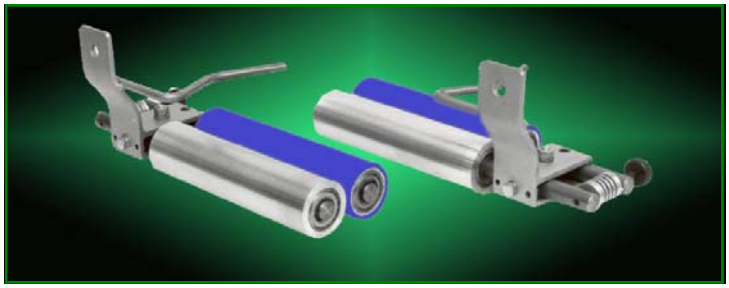

Nip Type Anti-Wrinkle

FOX TrimAway® Pneumatic Trim Removal
Systems ▪ Components ▪ Choppers ▪ Portable Systems

Standard FOX Trim Removal System

FOX Runner—Portable System

Trim Chopper

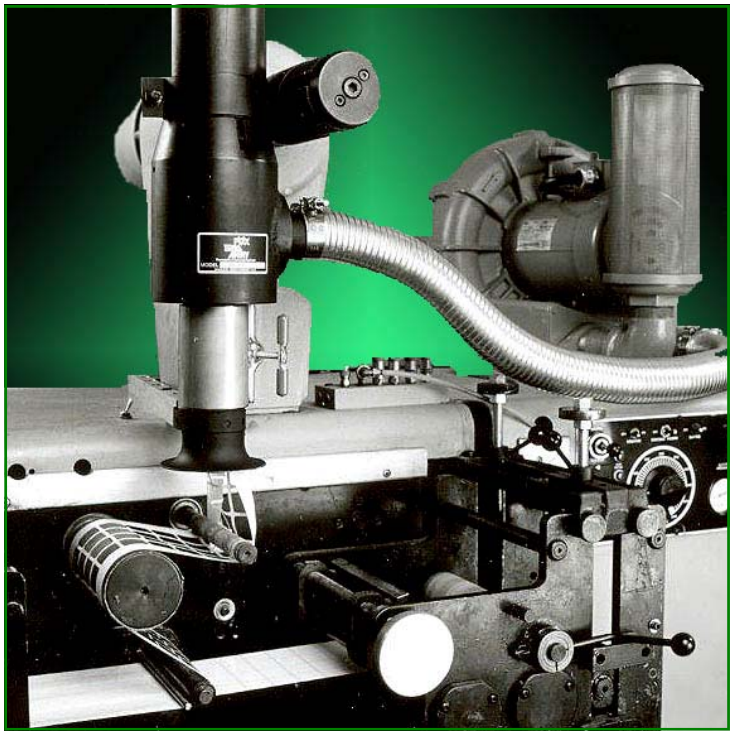

Matrix Removal System

Venturi

Blower

Pick Up Nozzles

Y Connector

ShaftLok™ Safety Chucks
Unwind and Rewind Modules

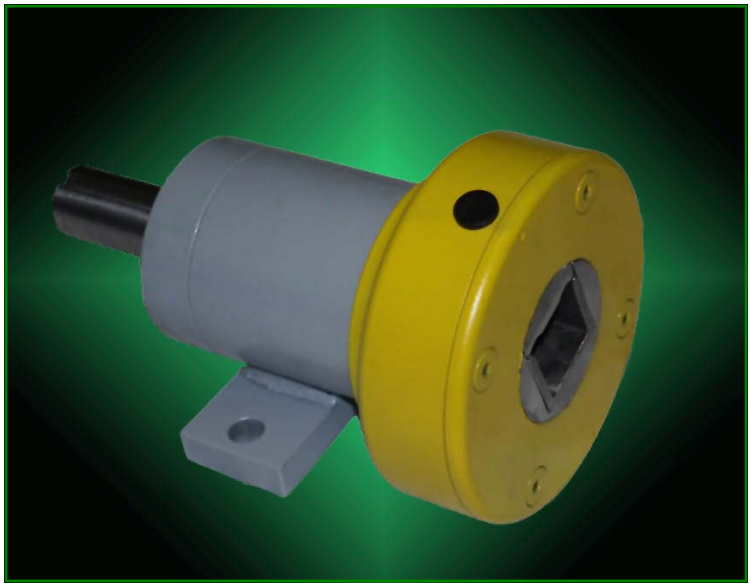

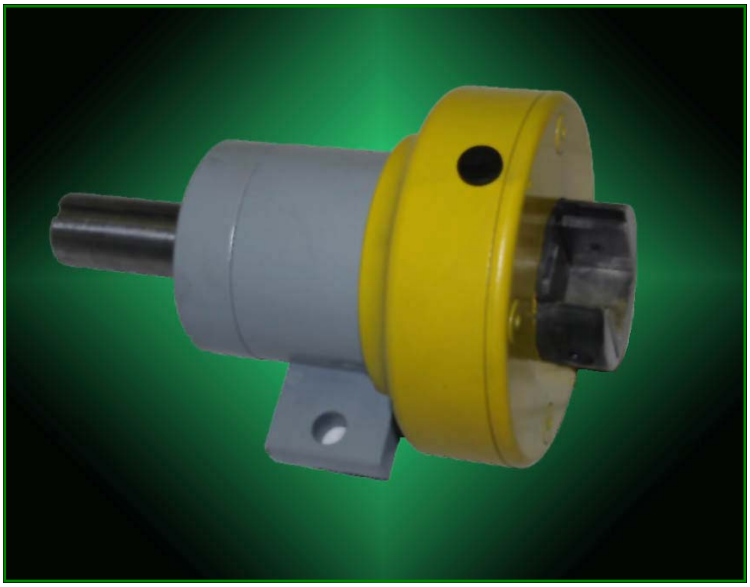

Available in Standard duty, Medium duty and Heavy duty

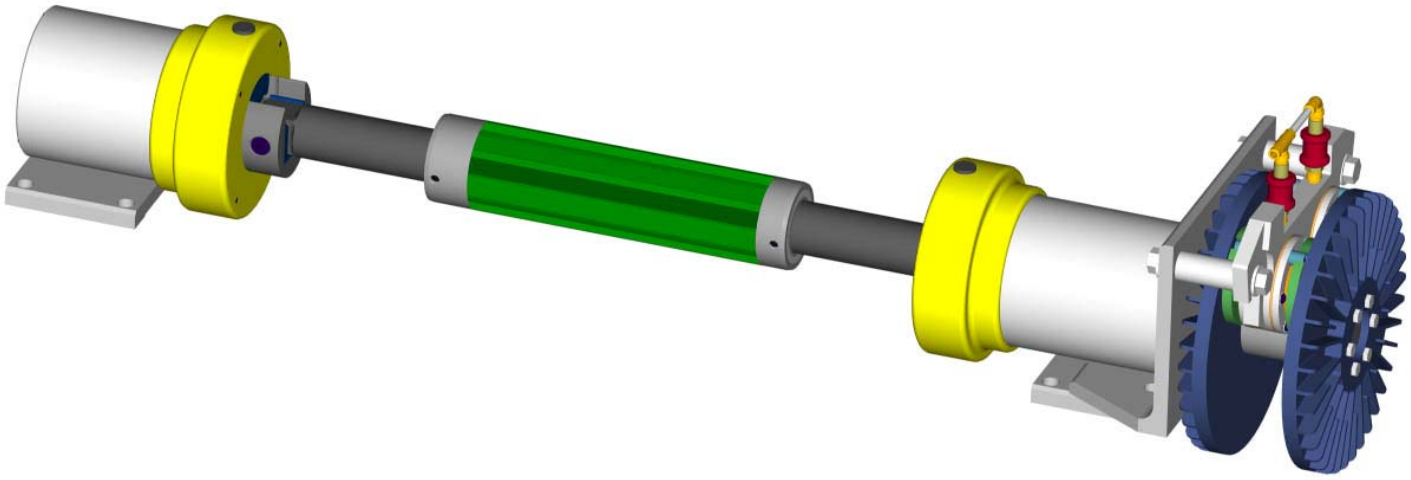

Unwind Module using ShaftLok Safety Chucks

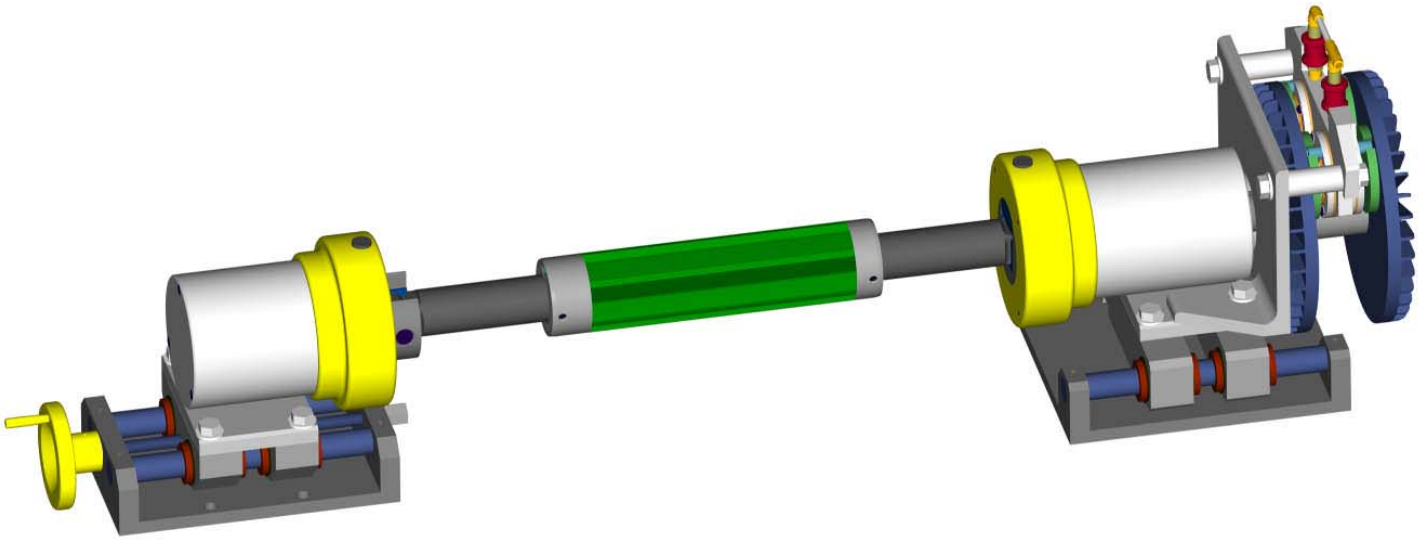

Unwind Module with Skew and Lateral Adjust

SimpLok™ Shaft Holders ▪ Unwind and Rewind Modules

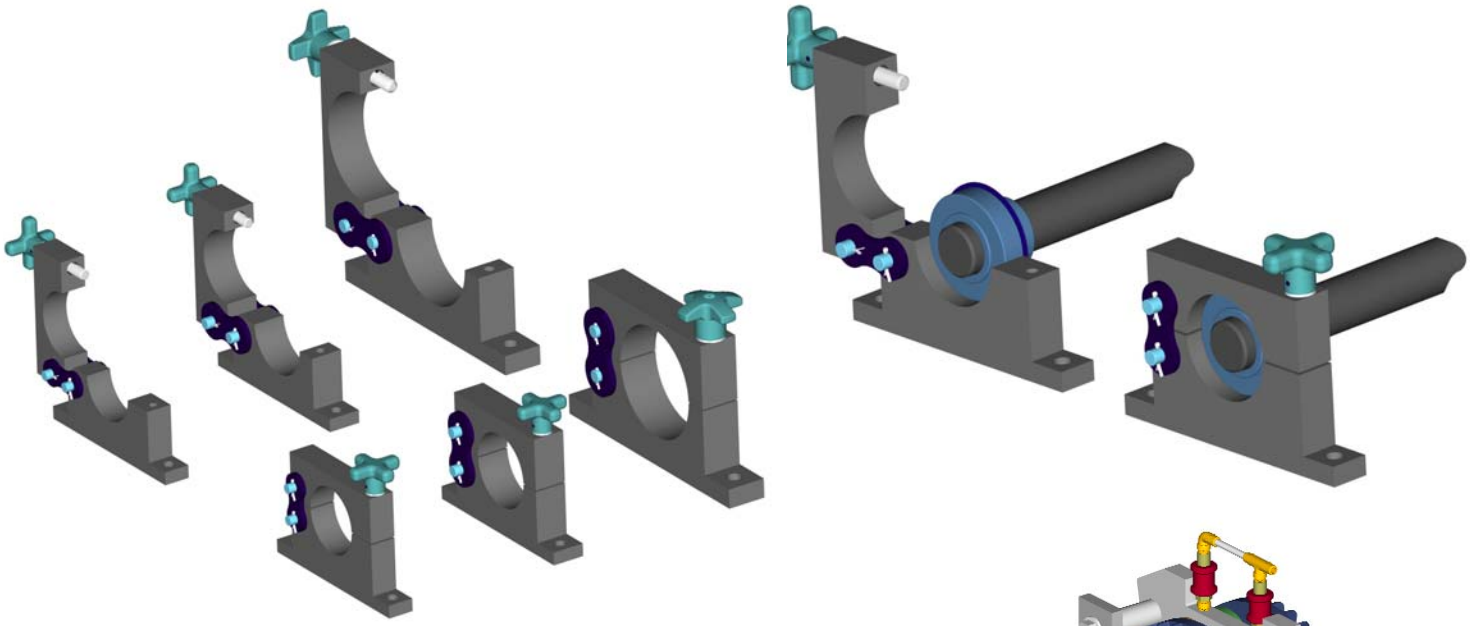

Available in Standard duty, Medium duty and Heavy duty

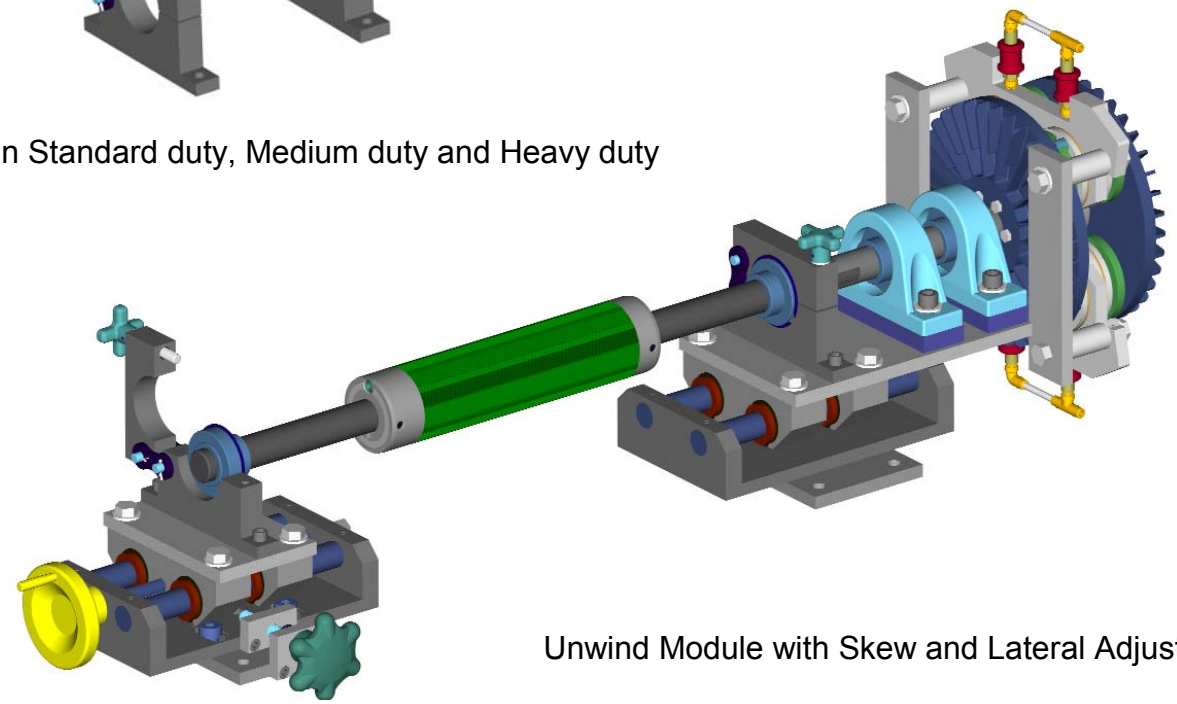

Unwind Module with Skew and Lateral Adjust

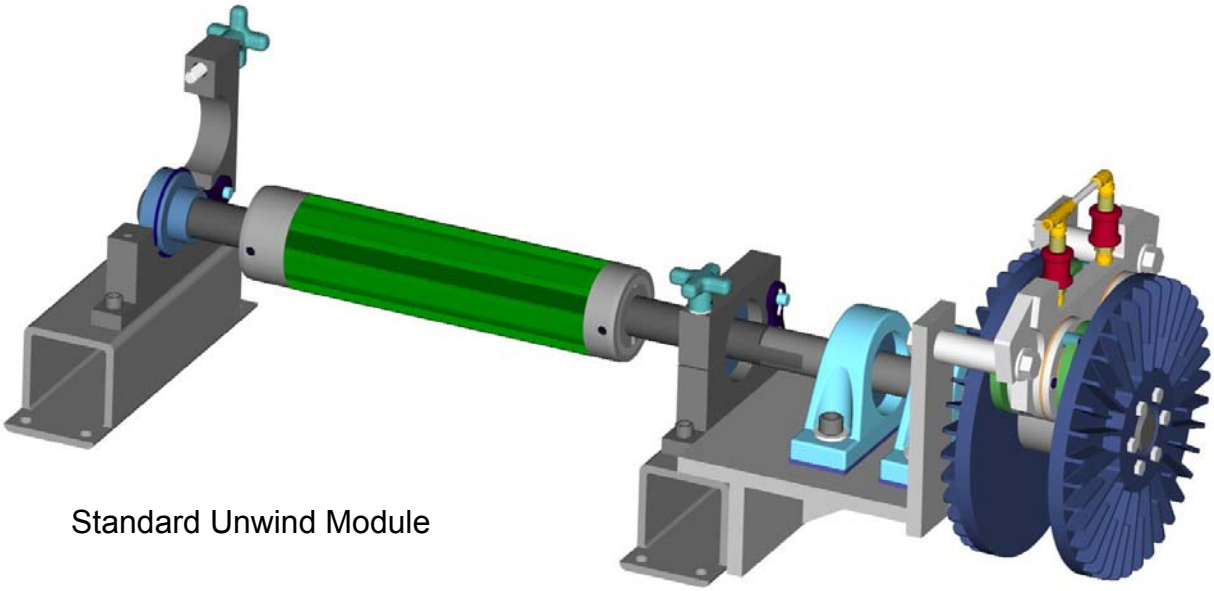

Standard Unwind Module

Roll Handling

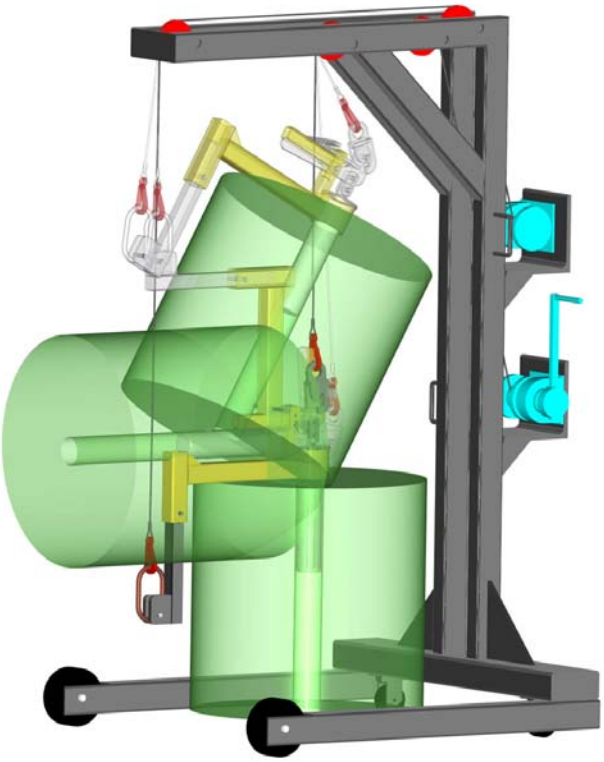

PH1 Roll Handler

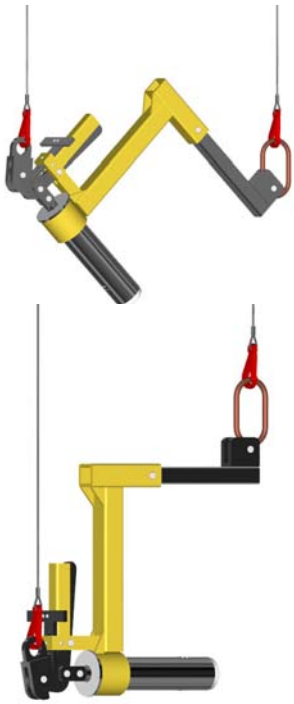

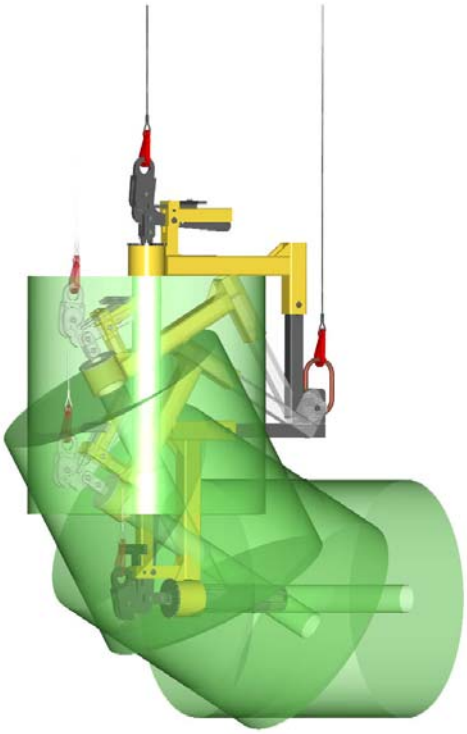

L-Roll Pivot Arm

Custom Unwind and Rewind Stands

Unwind with Nip

Unwind / S-wrap / Rewind

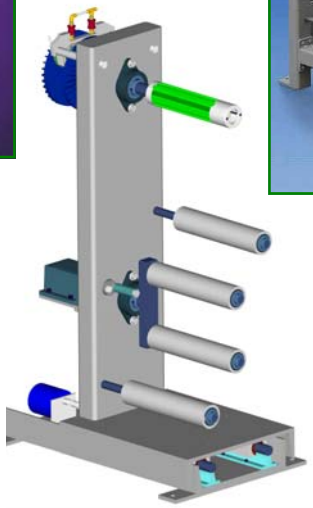

Cantilevered Unwind

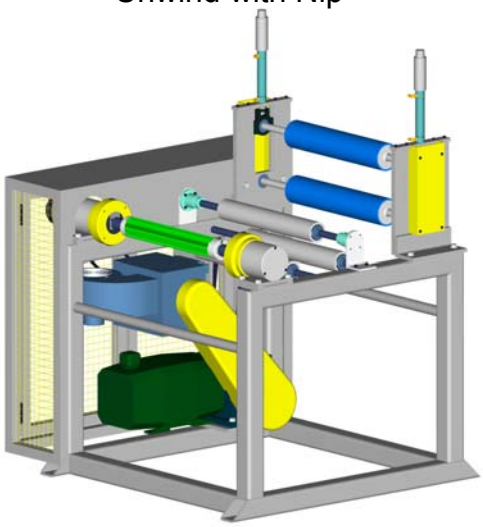

Rewind with Built-in Driven Nip Roll Assembly

Dual Station, Cantilevered Unwind with Nip Roll Assembly

Rollers ▪ Roller Assemblies

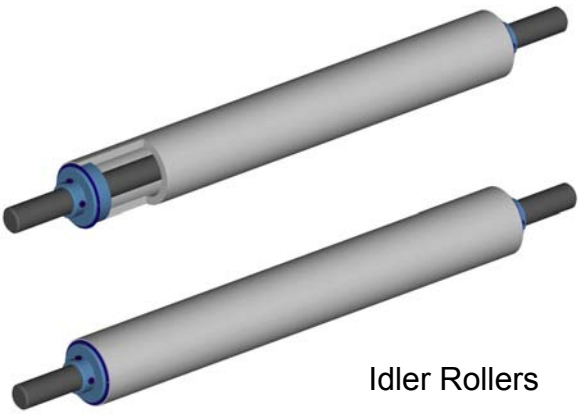

Idler Rollers

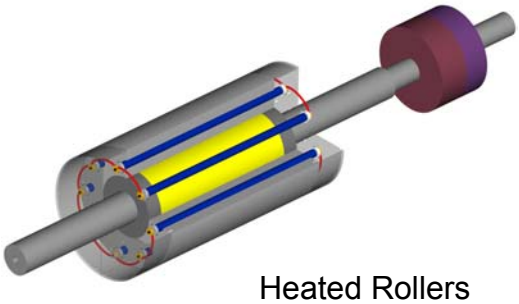

Heated Rollers

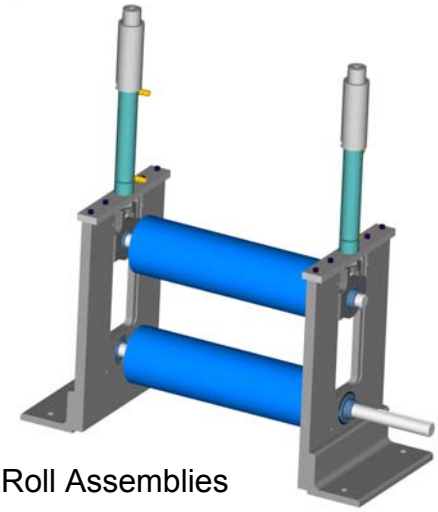

Nip Roll Assemblies

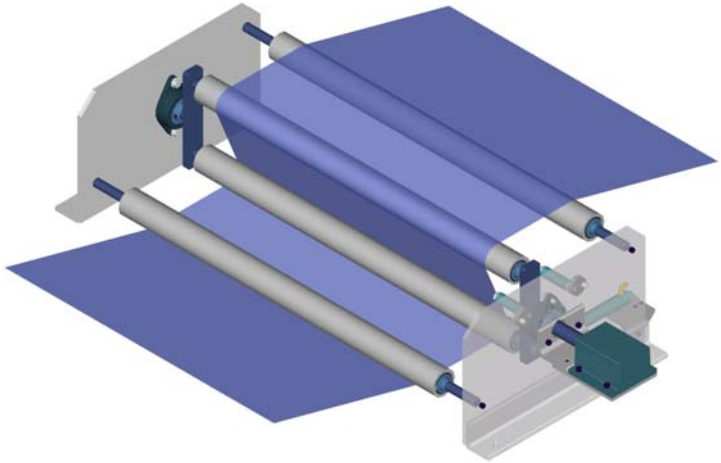

Dancer Roll Assemblies

Brakes ▪ Slitting

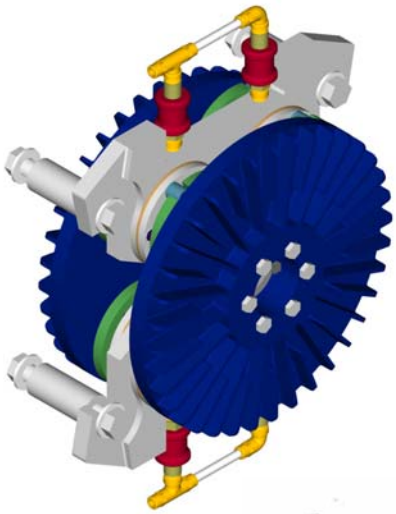

Air Brakes

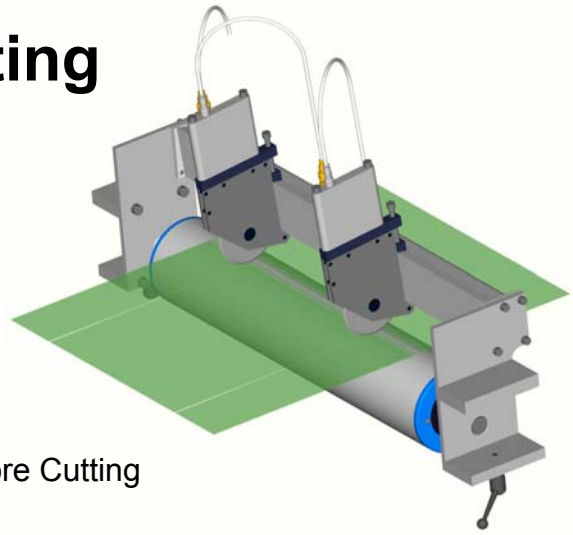

Score Cutting

Strap Brakes

Shear Cut Edge Trimmers

Rev 52510