SimpLok™ Shaft Holders

- Holders
- Unwind and rewind modules
- Skew adjustment
- Lateral adjustment
- Skew and lateral adjustment
- Web guided modules

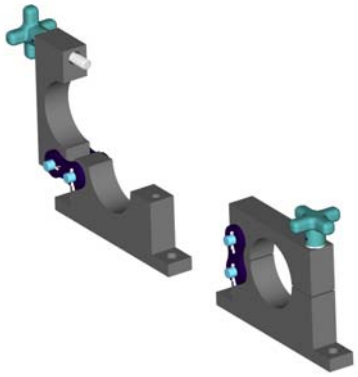

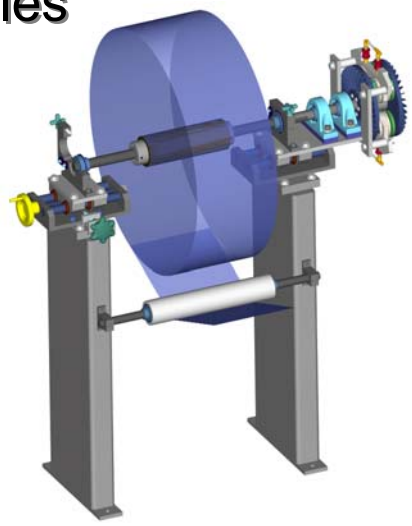

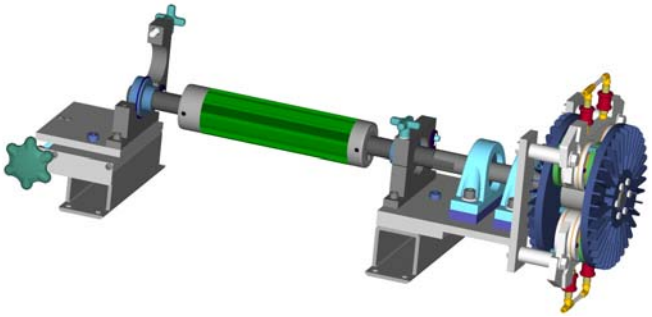

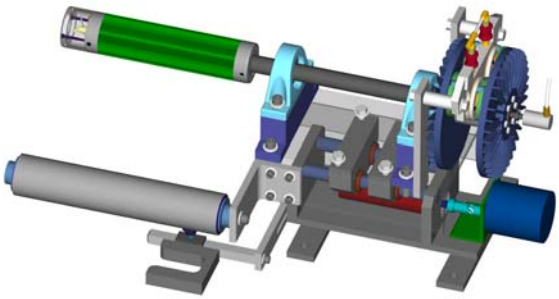

SimpLok™ Shaft Holders

SimpLok™ shaft holders are the perfect answer for holding unwind and rewind shafts. Their hinged design allows for fast and easy roll changes. They are extremely useful for mounting idler rolls where quick roll change is desired.

- Standard construction material is all steel for maximum strength, rigidity and long trouble free life
- Stainless steel and aluminum materials are available
- Designed for use with low friction ball bearings, which is the first step to ensuring optimum tension control
- Used for unwind, rewind and roller applications
- Fast, simple installation
- Square bore adapters are available for square shafts

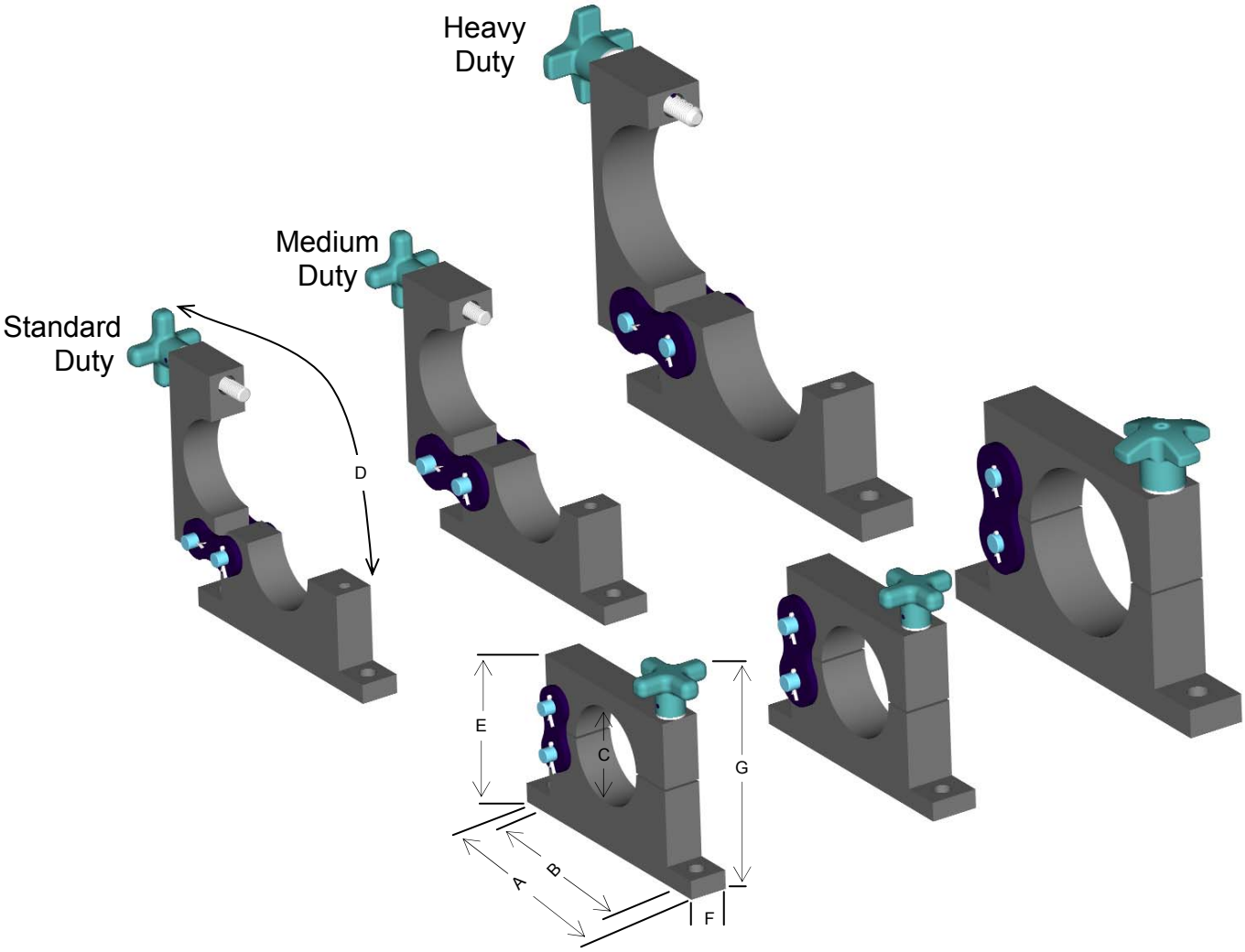

SimpLok™ Shaft Holder Dimensions								
		A	B	C	D	E	F	G
	Capacity (pair)	Width	Mounting centers	Maximum bore	Clearance	Height	Thickness	Overall height
Standard duty	1000 pounds	7.000	6.000	2.8346	6.500	3.750	1.000	5.500
Medium duty	2500 pounds	7.000	6.000	3.000	7.000	4.000	1.250	5.750
Heavy duty	5000 pounds	10.000	8.500	4.2500	9.000	5.000	1.500	7.250

Notes:
1) All dimensions in inches.
2) Only overall dimensions shown here. For complete dimensions and technical data, please view our specification sheets at www.converteraccessory.com/products/shaft_support.

SimpLok™ Shaft Holders

Available in standard duty, medium duty and heavy duty

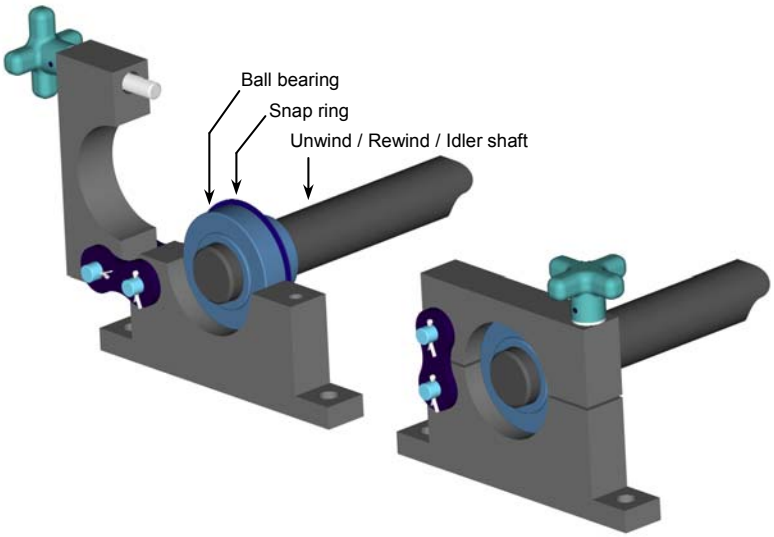

SimpLok™ shaft holder—
standard application

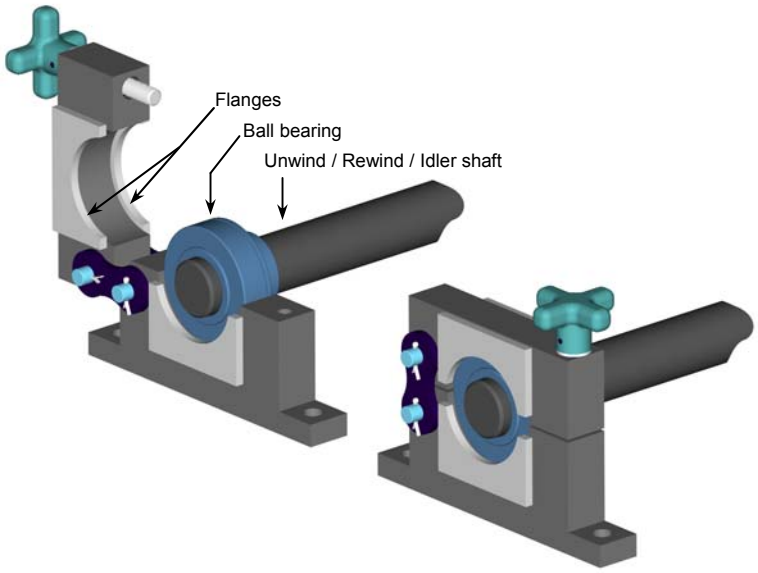

SimpLok™ shaft holder with flanges
to house bearings

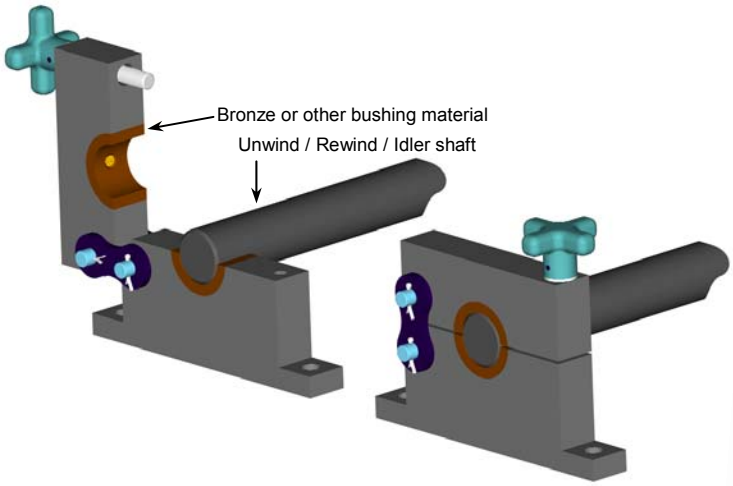

SimpLok™ shaft holder with
mounted bushings

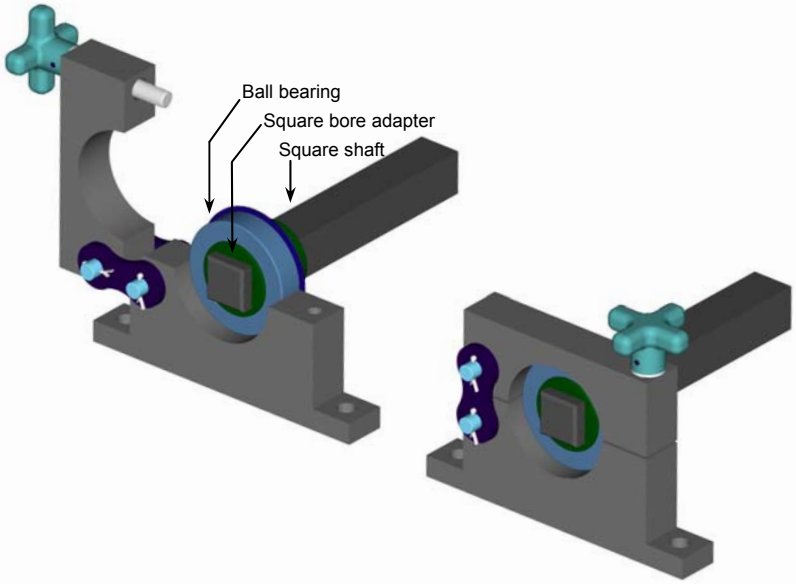

SimpLok™ shaft holder with square
bore adapter

Visit www.converteraccessory.com/products/shaft_support to view and download specification sheets

SimpLok™ Shaft Holder Unwind Module

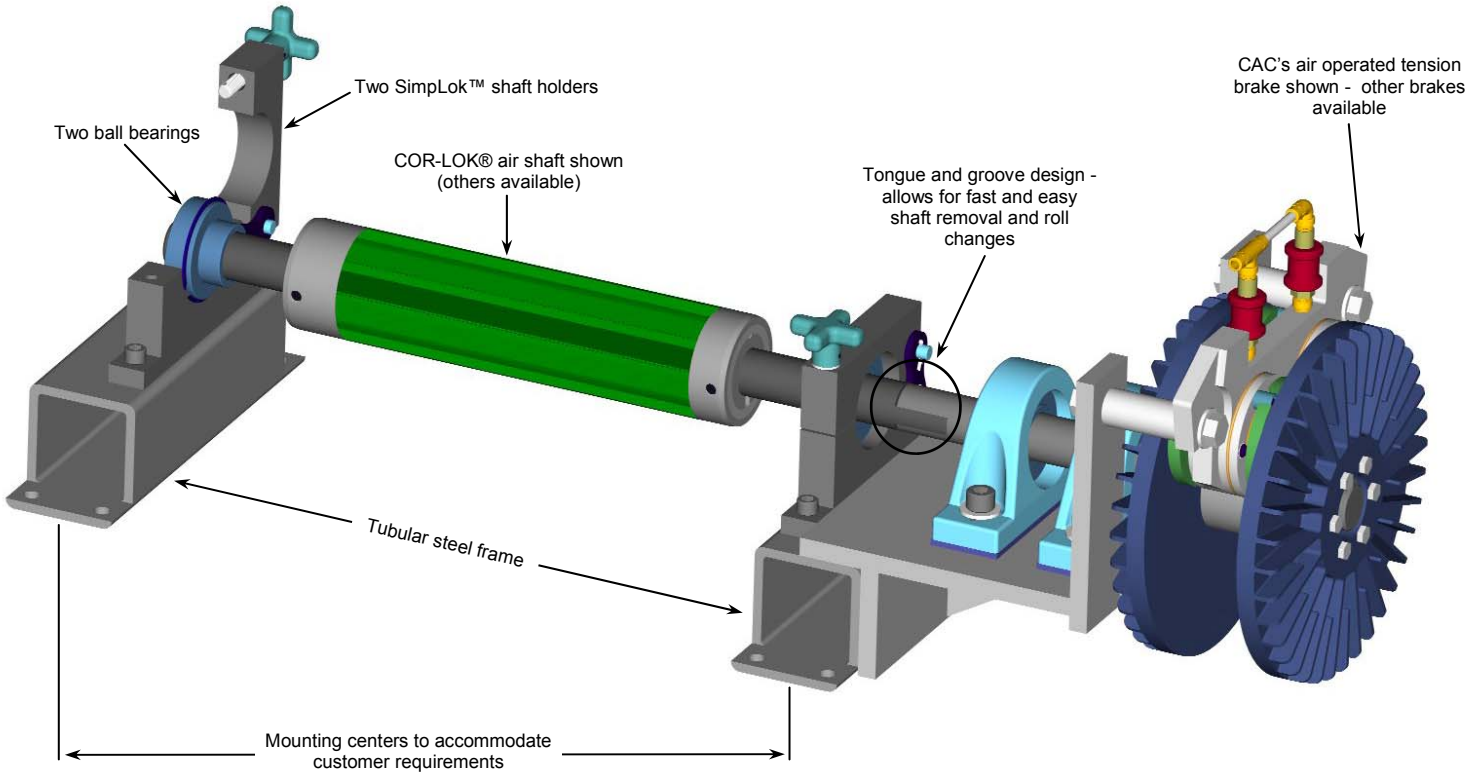

SimpLok™ Shaft Holder Rewind / Driven Unwind Module

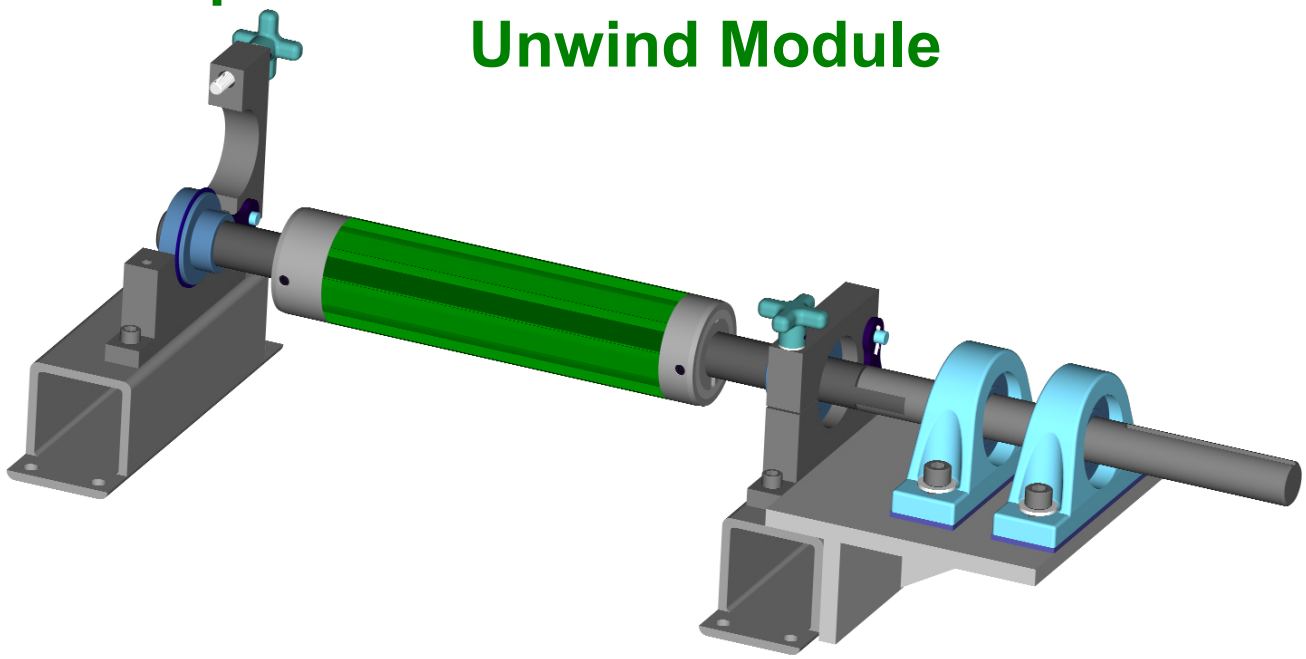

SimpLok™ shaft holder modules are the perfect answer where an unwind or rewind station is required on existing machine framework. These modules work well where easy installation of better braking and tension control systems are desired. Heavy duty steel construction provides for years of reliable operation. Ball bearings are typically supplied to ensure the proper foundation for accurate tension control.

Designs may include CAC's air operated tension brake and CAC's COR-LOK® air shafts for a complete unwind or rewind module solution. These modules may also be supplied with other brakes and / or air shafts at your request.

SimpLok™ Shaft Holder Module with Skew Adjust

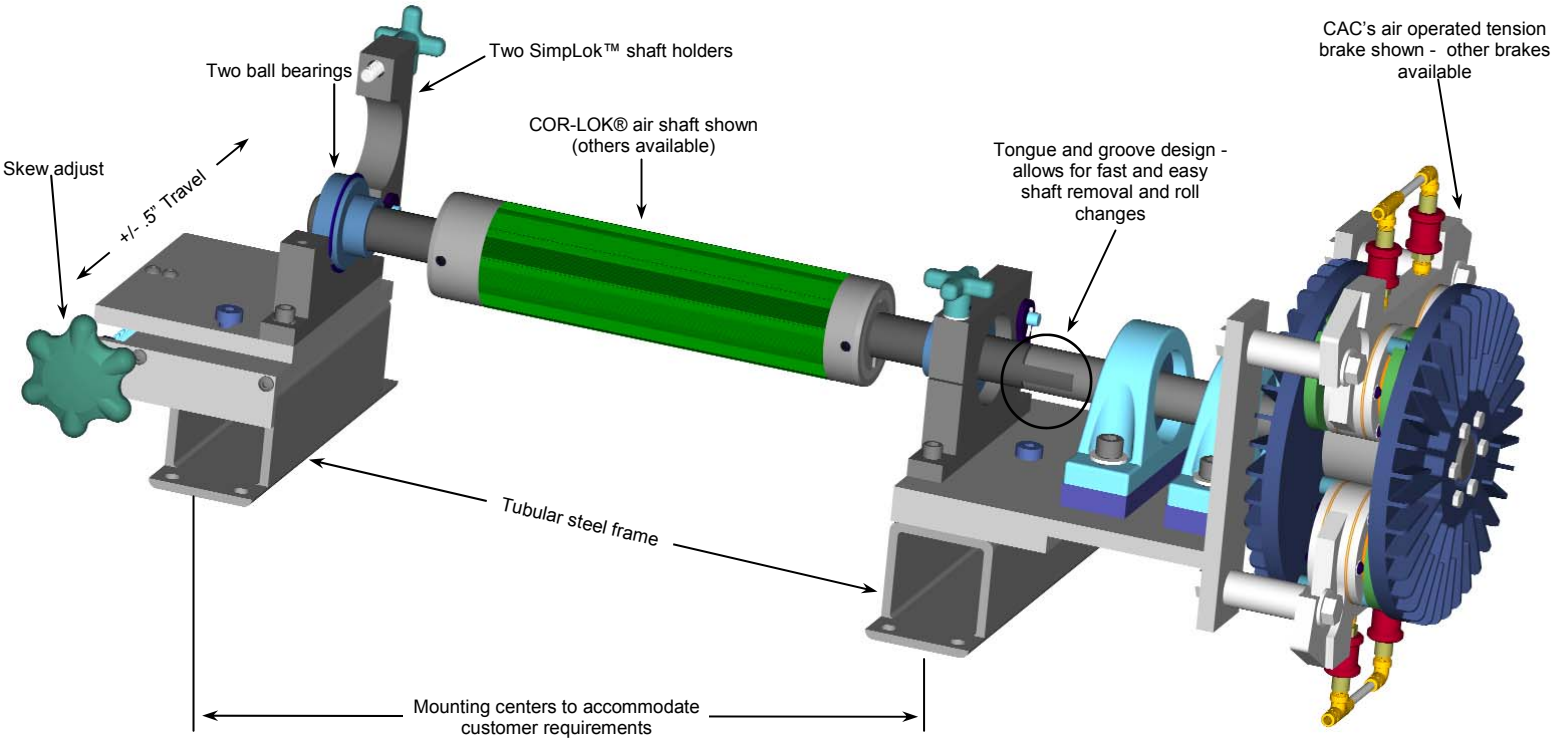

SimpLok™ shaft holder module with skew adjustment is an effective solution to misaligned rolls and rollers. Skew adjustment of +/- .5" helps combat issues with tight side / loose side condition webs and rolls.

SimpLok™ Shaft Holder Module with Lateral Adjust

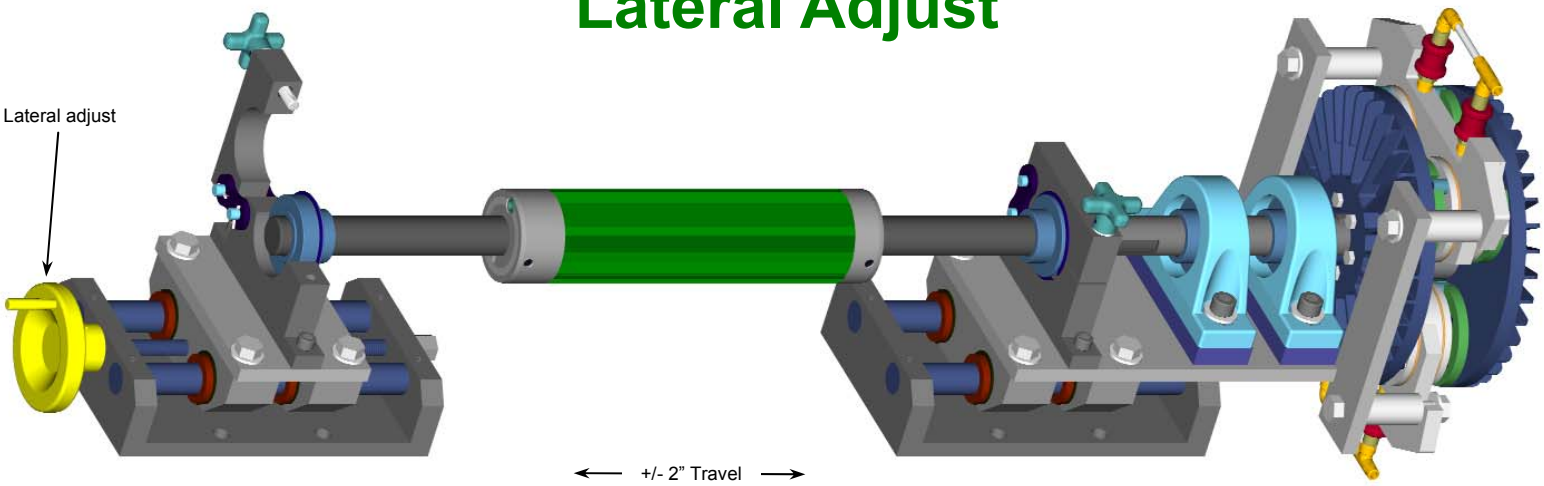

SimpLok™ shaft holder module with lateral adjust allows manual side to side positioning of unwind and rewind rolls. Lateral adjustment of +/- 2" provides proper roll positioning to assist with web side lay issues in any converting process .

As with all SimpLok™ shaft holder modules, CAC components, such as COR-LOK® air shaft and CAC's air operated tension brake may be supplied for a complete modular solution or these units can be designed to accommodate components supplied by others.

Visit www.converteraccessory.com/products/shaft_support to view and download specification sheets

SimpLok™ Shaft Holder Module with Skew and Lateral Adjust

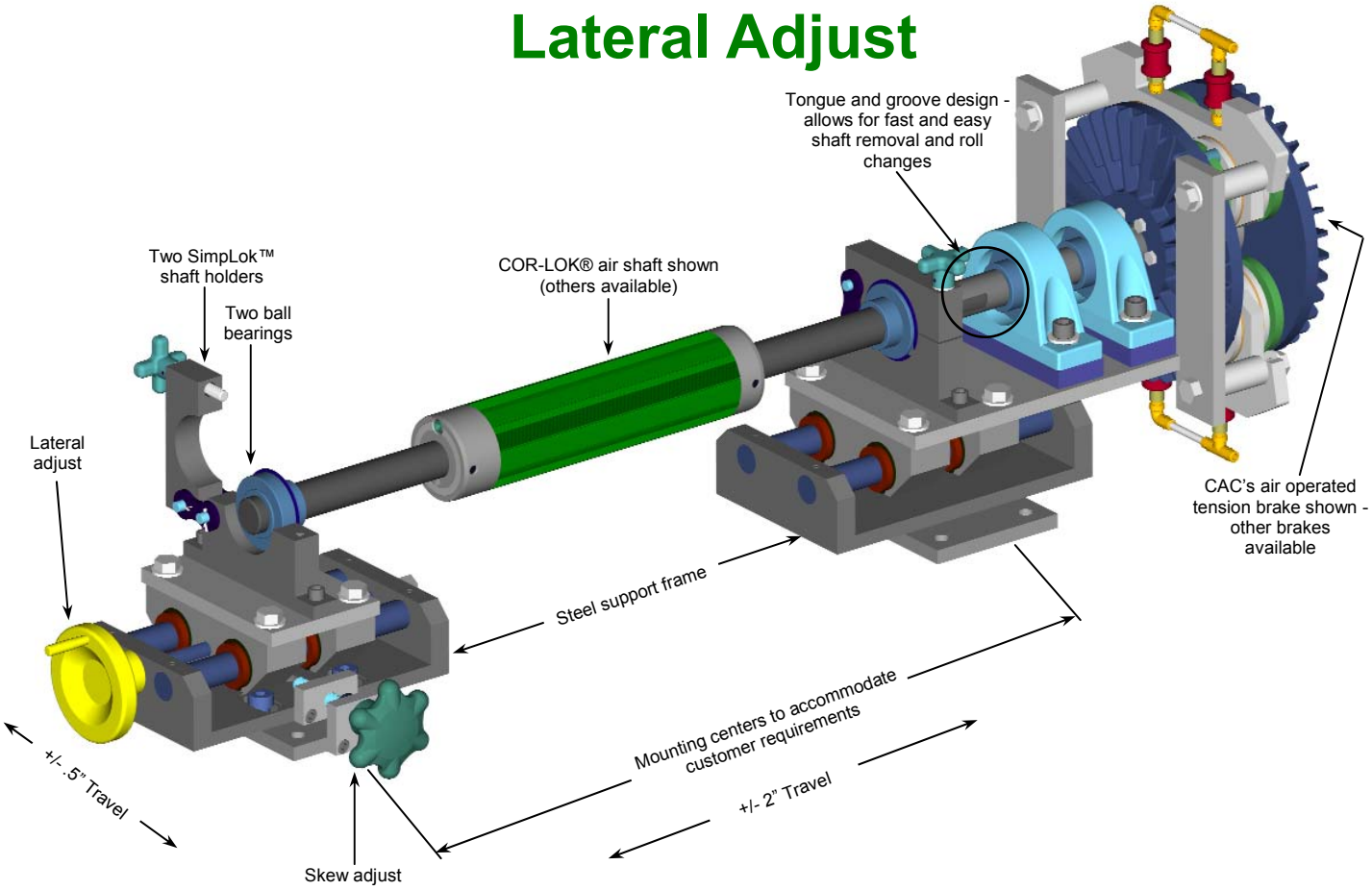

SimpLok™ shaft holder module with skew and lateral adjust combines adjustments for misaligned rolls / rollers and side lay positioning. This assembly provides the ultimate for manually positioning unwind and rewind rolls.

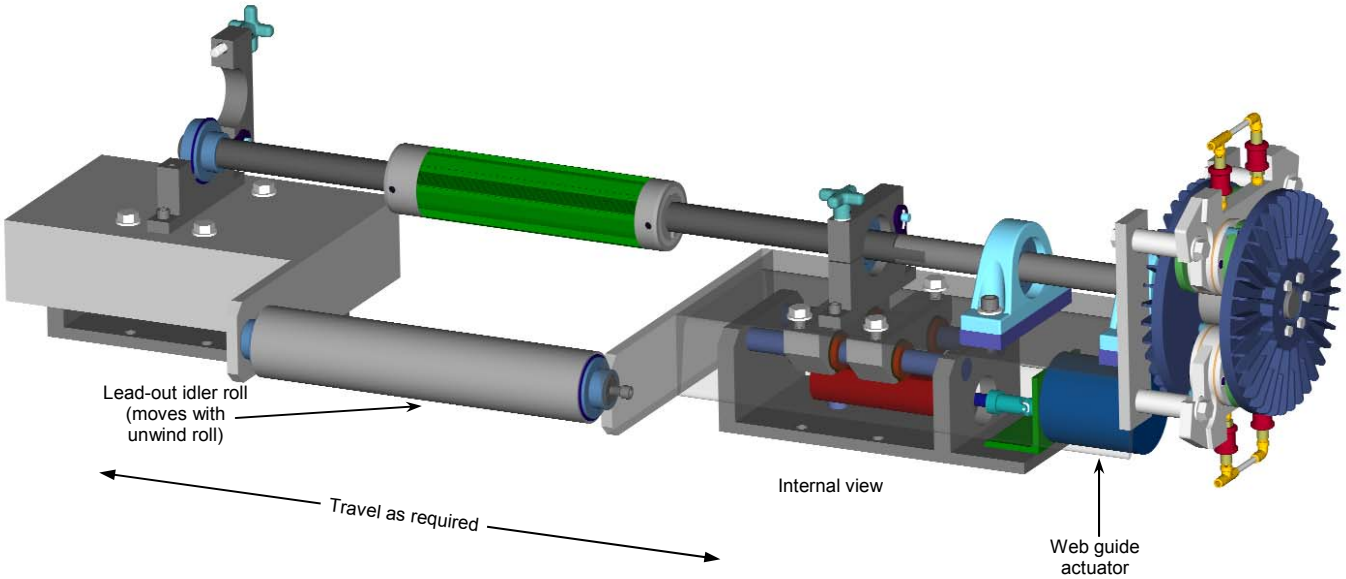

SimpLok™ shaft holder module with web guide modification is an outstanding option when considering addition of web guiding for any unwind or rewind station. These units are designed to accept various web guide actuators. Complete engineered modules are designed to fit your application to allow for easy, fast, plug and play implementation of this upgrade for your converting process.

Cantilevered SimpLok™ Shaft Holder Module with Web Guide Modification

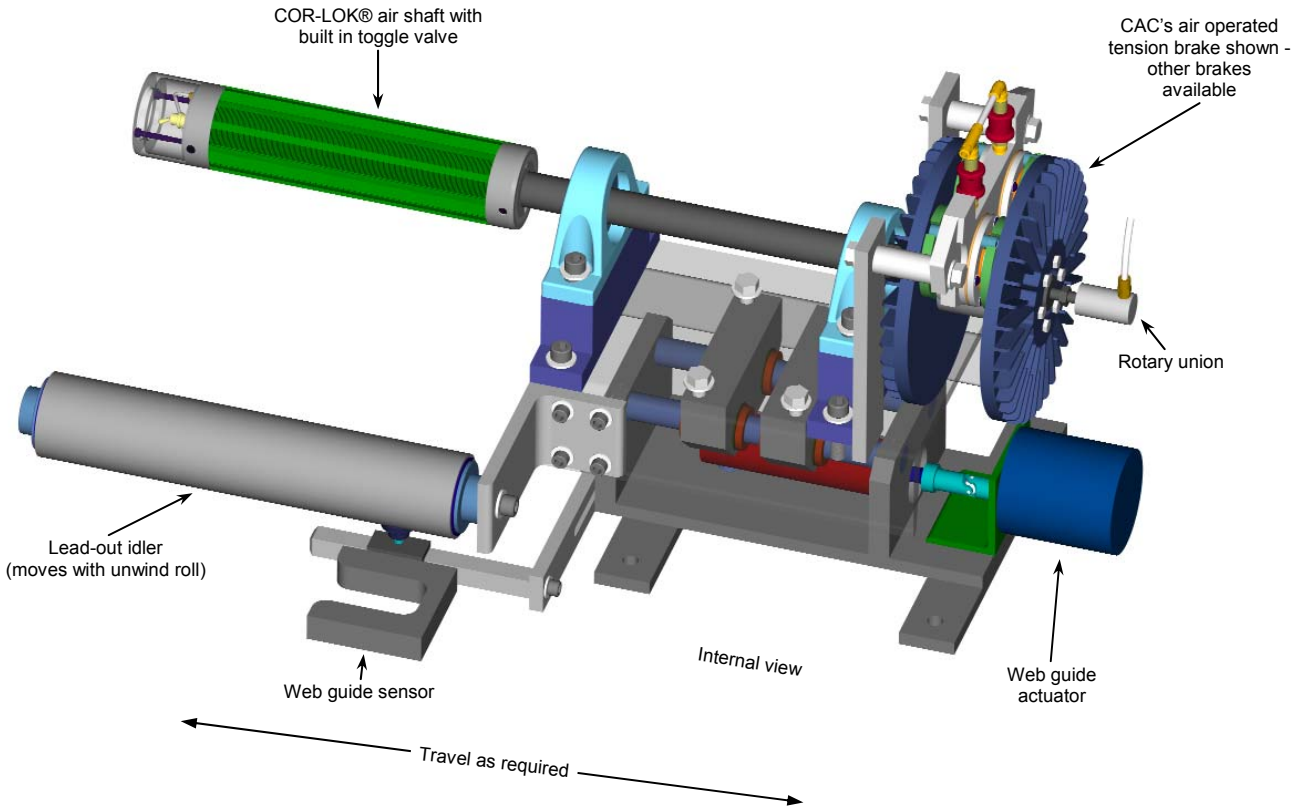

Unwind Application with SimpLok™ Module

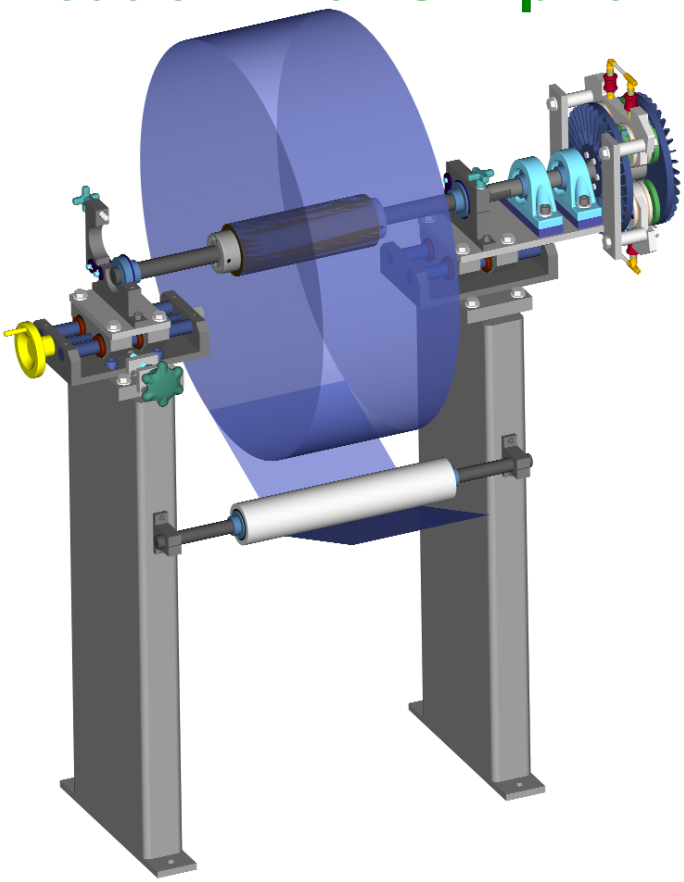

Visit www.converteraccessory.com/products/shaft_support to view and download specification sheets

Tried, tested and reliable products for the web-fed industry

- **Air shafts and chucks - www.cor-lok.com**
- **Pneumatic trim and matrix removal systems**
  www.foxtrimaway.com
- **Shaft support systems - www.simplok.com**
- **Wrinkle removal systems - www.cacwrinklestop.com**
- **Unwind / rewind systems**
  www.converteraccessory.com/products/roll_support
- **Modular slitting systems**
  www.converteraccessory.com/products/slitting
- **Brakes and clutches**
  www.converteraccessory.com/products/related/brake
- **Roll Handling**
  www.converteraccessory.com/products/roll_lifting
- **Dancer Roll Assemblies**
  www.converteraccessory.com/products/dancer
- **Slitting - www.converteraccessory.com/products/slitting**
- **Idlers - www.converteraccessory.com/products/related/mainidler**
- **Custom Equipment**
  www.converteraccessory.com/products/related

Visit us at www.converteraccessory.com/salesrep
for your local sales representative or
contact us direct

CONVERTER ACCESSORY CORPORATION
201 Alpha Road, Wind Gap, PA 18091-1279
www.converteraccessory.com
Email: cac@epix.net

●800-433-2413 ●610-863-6008
●800-709-1007 ●610-863-7818 FAX

Web Handling Technology . . . CAC Engineered and Manufactured