COR-LOK® Air Shafts & Chucks

- Air Shafts
- Air Chucks
- Mechanical Chucks
- Aluminum Core Cones

Air Shafts & Chucks

The field-proven concept in core locking

CAC COR-LOK Air Shaft and Chucks are manufactured under U.S. PATENT NUMBERS: 3825167, 3917187, 3937412, 4124173 AND 4944468

COR-LOK® air shafts and chucks provide positive, high torque core locking with zero core damage. COR-LOK® is different because it utilizes unique, spiral wrapped inflating tube to engage aluminum interlocking segments (leaves) to lock your core in place.

- Lightweight—saves employee fatigue
- Easy to slide in and out of cores for fast operation
- High torque output to ensure your cores stay locked in place
- Positive gripping through full length of your cores
- Zero core damage with use of interlocking segment (leaf) design
- Inflating tube is an engineered shape for maximum gripping force
- Very low maintenance
- Made in the USA
- Easy to maintain with standard, off-the-shelf parts
- Available for 1" to 18" ID cores
- 70 PSI—120 PSI operating range
- Available in aluminum (standard), steel, stainless steel and carbon fiber construction
- Air shafts and chucks are available with thru bores (standard), thru shafts and journals
- Standard configurations and custom configurations to suit your needs
- Easily combined with CAC's shaft holders and safety chucks for complete unwind station upgrades

Inside CAC's COR-LOK® Air Shafts & Chucks

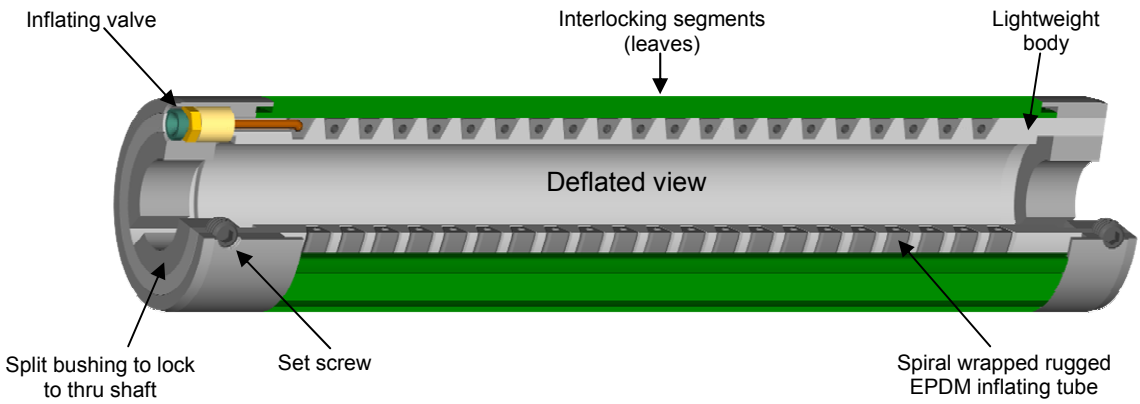

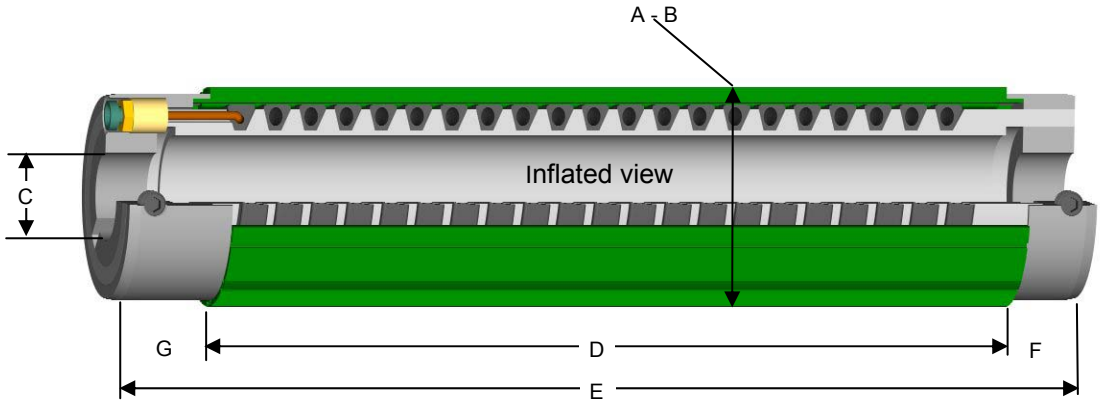

COR-LOK air shaft dimensions								
To fit core size:	A	B	C	D	E	F	G	G
	Deflated diameter	Inflated diameter	Bore range	Expanding length	Over all length	End cap, plain end	End cap, valve end (PTV valve)	End cap, valve end (Schrader valve)
1"	31/32"	1-3/32"	N/A	3"-30"	N/A	1"	N/A	1"
1-1/2"	1-15/32"	1-19/32"	N/A	3"-30"	N/A	1"	N/A	1"
2"	1-31/32"	2-3/32"	Up to 1"	3"-72"	5"-74"	1"	1.5"	1"
3"	2-15/16"	3-3/16"	Up to 1.75"	3" - 120"	5" - 122"	1"	1.5"	1"
4"	3-15/16"	4-3/16"	Up to 2.75"	3" - 120"	5" - 122"	1"	1.5"	1"
5"	4-15/16"	5-3/16"	Up to 3"	3" - 120"	5" - 122"	1"	1.5"	1"
6"	5-15/16"	6-3/16"	Up to 4"	3" - 120"	5" - 122"	1"	1.5"	1"
6.75"	6-11/16"	6-7/8"	Up to 4"	3" - 120"	5" - 122"	1"	1.5"	1"
7"	6-15/16"	7-3/16"	Up to 5"	3" - 120"	5" - 122"	1"	1.5"	1"
8"	7-15/16"	8-3/16"	Up to 6"	3" - 120"	5" - 122"	1"	1.5"	1"
9"	8-15/16"	9-3/16"	Up to 7"	3" - 120"	5" - 122"	1"	1.5"	1"
10"	9-15/16"	10-3/16"	Up to 8"	3" - 120"	5" - 122"	1"	1.5"	1"
11"	10-15/16"	11-3/16"	Up to 9"	3" - 120"	5" - 122"	1"	1.5"	1"
12"	11-15/16"	12-3/16"	Up to 10"	3" - 120"	5" - 122"	1"	1.5"	1"
Note: Thru bores machined .010" - .015" oversized unless otherwise specified								
Note: COR-LOK air shafts are available for non-standard and metric core sizes. Please contact us at 800-433-2413 or 610-863-6008 for more information on non-standard and metric core diameters.								

Air Chucks

COR-LOK® air chuck with Schrader valve

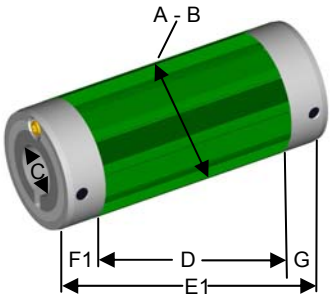

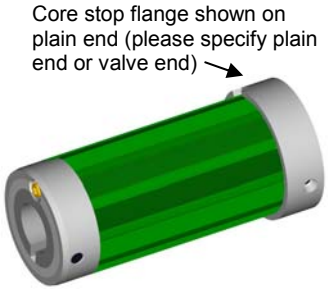

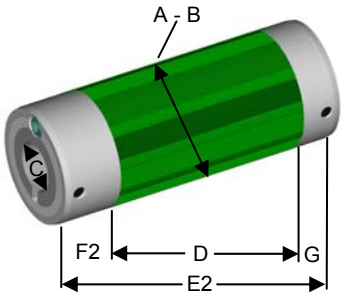

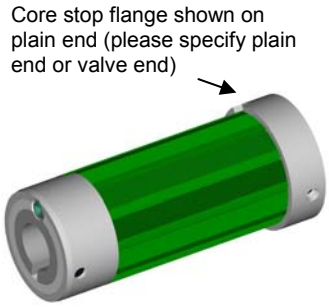

COR-LOK® air chuck dimensions										
To fit core size:	A	B	C	D	E 1	E 2	F1	F2	G	
	Deflated diameter	Inflated diameter	Bore range	Expanding length	Overall length	Overall length	End cap, valve end	End cap, valve end	End cap, plain end	Approx. weight
3"	2-15/16"	3-3/16"	Up to 1.75"	5"	7"	7.5"	1"	1.5"	1"	2 lbs
4"	3-15/16"	4-3/16"	Up to 2.75"	5"	7"	7.5"	1"	1.5"	1"	2-1/2 lbs
5"	4-15/16"	5-3/16"	Up to 3"	5"	7"	7.5"	1"	1.5"	1"	3 lbs
6"	5-15/16"	6-3/16"	Up to 4"	6"	8"	8.5"	1"	1.5"	1"	12-1/2 lbs
6.75"	6-11/16"	6-7/8"	Up to 4"	6"	8"	8.5"	1"	1.5"	1"	13 lbs
7"	6-15/16"	7-3/16"	Up to 5"	6"	8"	8.5"	1"	1.5"	1"	13 lbs
8"	7-15/16"	8-3/16"	Up to 6"	6"	8"	8.5"	1"	1.5"	1"	15 lbs
9"	8-15/16"	9-3/16"	Up to 7"	6"	8"	8.5"	1"	1.5"	1"	17-1/2 lbs
10"	9-15/16"	10-3/16"	Up to 8"	7"	9"	9.5"	1"	1.5"	1"	22 lbs
11"	10-15/16"	11-3/16"	Up to 9"	7"	9"	9.5"	1"	1.5"	1"	25 lbs
12"	11-15/16"	12-3/16"	Up to 10"	7"	9"	9.5"	1"	1.5"	1"	27 lbs
Note: Thru bores machined .010" - .015" oversized unless otherwise specified										

COR-LOK® end plugs

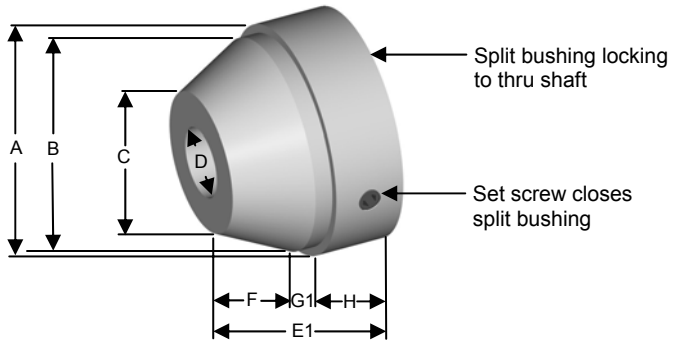

COR-LOK® center plugs

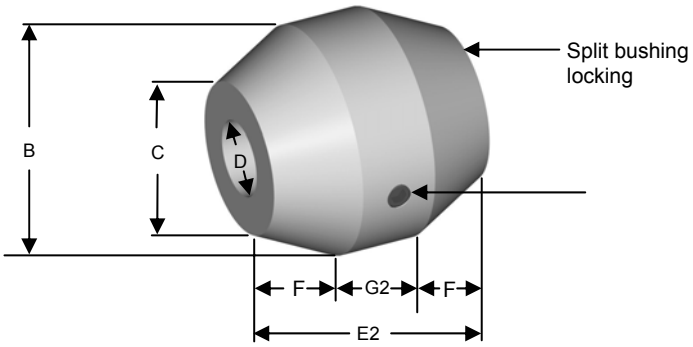

Center and end plug dimensions										
To fit core size:	A	B	C	D	E1	E2	F	G1	G2	H
	Flange diameter	Support land diameter	Minor diameter	Bore range	Over all length	Overall length	Taper length	Support land length	Support land length	Flange length
3"	3.25"	3"	2"	Up to 1.75"	2.25"	3"	1"	.25"	1"	1"
4"	4.25"	4"	3"	Up to 3"	2.25"	3"	1"	.25"	1"	1"
5"	5.25"	5"	4"	Up to 4"	3"	3"	1.5"	.5"	1"	1"
6"	6.25"	6"	4.5"	Up to 4"	3"	4"	1.5"	.5"	1"	1"
6.75"	7"	6.75"	5.25"	Up to 4"	3"	4"	1.5"	.5"	1"	1"
7"	7.25"	7"	5.5"	Up to 5"	3"	4"	1.5"	.5"	1"	1"
8"	8.25"	8"	6.5"	Up to 6"	3"	4"	1.5"	.5"	1"	1"
9"	9.25"	9"	7.5"	Up to 7"	3"	4"	1.5"	.5"	1"	1"
10"	10.25"	10"	8.5"	Up to 8"	3"	4"	1.5"	.5"	1"	1"
11"	11.25"	11"	9.5"	Up to 9"	3"	4"	1.5"	.5"	1"	1"
12"	12.25"	12"	10.5"	Up to 10"	3"	4"	1.5"	.5"	1"	1"

Valve Options

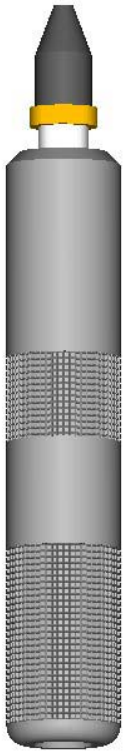

PTV inflating gun

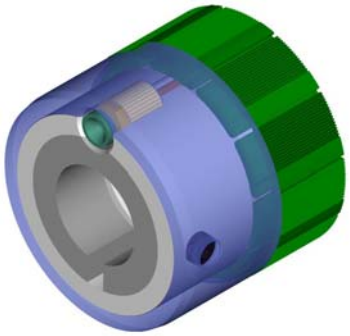

PTV type valve,
standard end location

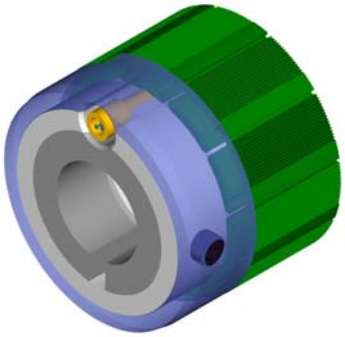

Schrader type valve,
standard end location

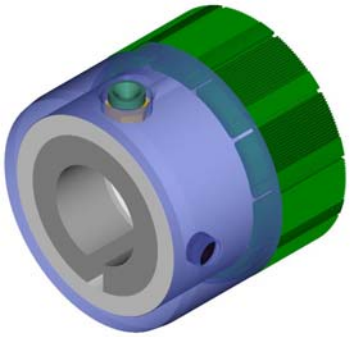

PTV type valve,
optional face location

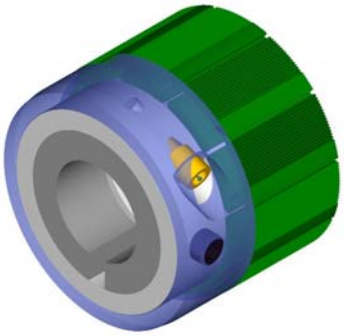

Schrader type valve,
optional face location

Schrader inflating
gun

COR-LOK® Toggle Valve Air Shafts

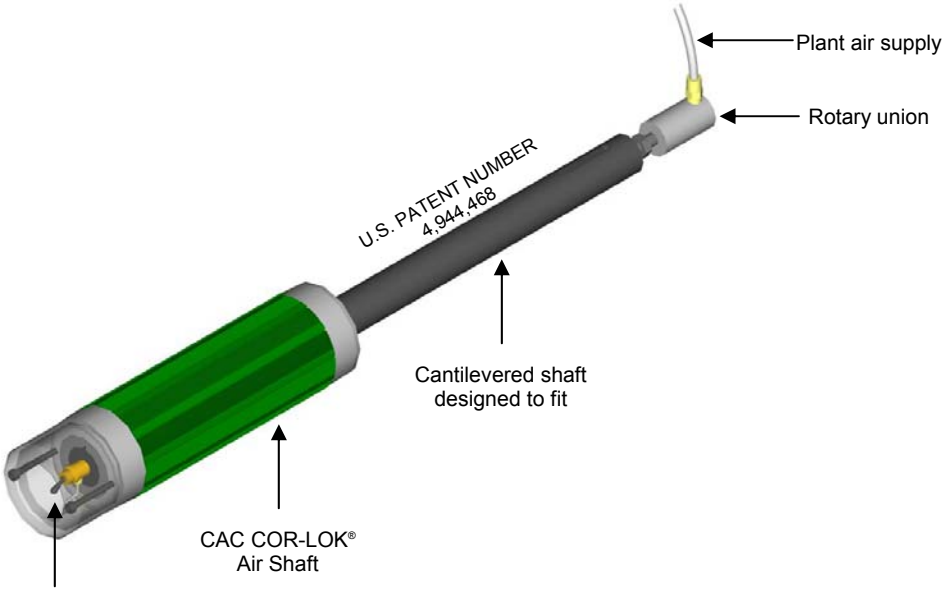

Save time with CAC's toggle valve air shaft. Plant air is supplied to the air shaft through a rotary union. Inflate / deflate operation is achieved through the integral toggle valve mounted in the air shaft itself. This unique, patented air shaft design allows machine operators to make roll changes in the shortest amount of time. No inflating guns are required, no external inflate / deflate operators are required. These air shafts are available from 2 inches to 18 inches in diameter.

Lateral Adjust COR-LOK® Air Shafts

COR-LOK air shafts with built in lateral adjust allow machine operators to adjust roll side-lay. These air shafts can be adjusted while the machine is running so side-lay adjustments can be made without stopping the machine. They are available to fit core size from 2 inches to 18 inches.

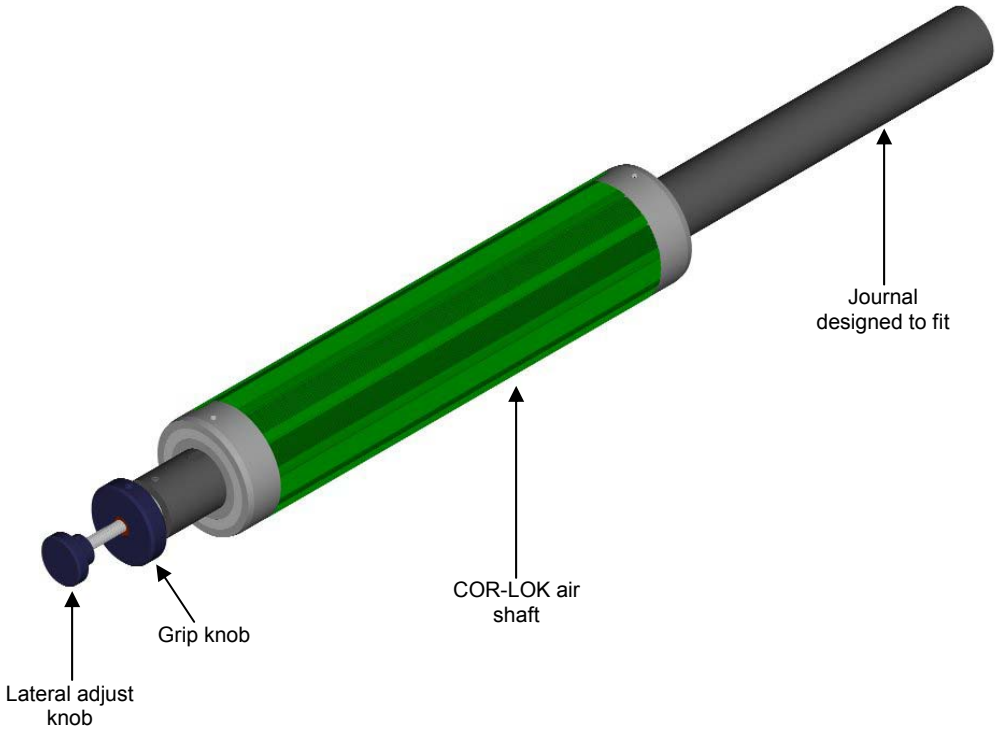

Mechanical Chucks

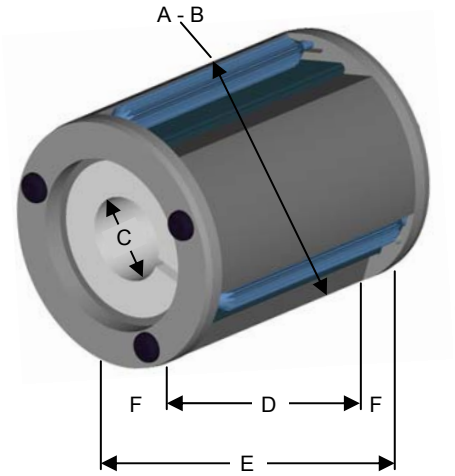

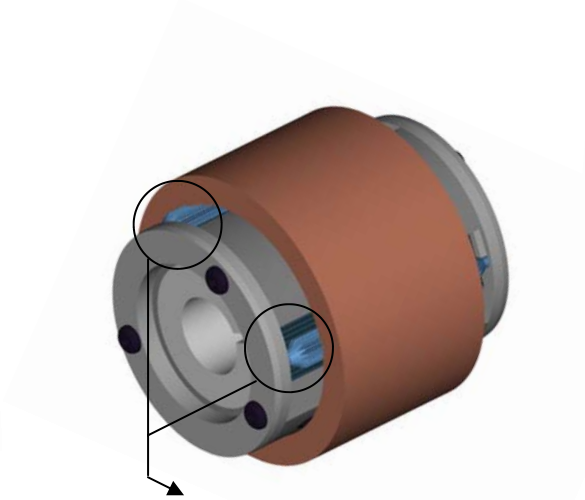

Rollers in the forward position lock cores mechanically

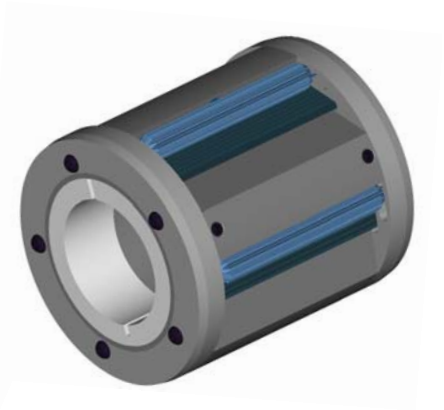

6" Mechanical chuck

COR-LOK® mechanical chucks are the answer for applications where simple core support is required. These chucks do not require any compressed air to operate. They engage and lock the core without tools or any external operation by the machine operator. When your roll starts to rotate, these chucks automatically engage your core and lock it in place.

COR-LOK® mechanical chucks are an excellent answer where heavy duty, high torque core support is required. They work equally well for light duty applications. They are available in aluminum and steel.

COR-LOK mechanical chuck dimensions						
To fit core size:	A	B	C	D	E	F
	Unlocked diameter	Locked diameter	Bore range	Locking face	Overall length	End cap
2"	2.064"	2.122"	Up to 1"	3.250"	3.750"	.250"
3"	3.064"	3.122"	Up to 1.75"	3.250"	3.750"	.250"
4"	4.064"	4.122"	Up to 3"	3.250"	3.750"	.250"
5"	5.064"	5.122"	Up to 4"	3.250"	3.750"	.250"
6"	6.029"	6.146"	Up to 4"	5.000"	6.500"	.750"
6-3/4"	6.779"	6.896"	Up to 4"	5.000"	6.500"	.750"
7"	7.029"	7.146"	Up to 5"	5.000"	6.500"	.750"
8"	8.029"	8.146"	Up to 6"	5.000"	6.500"	.750"
9"	9.029"	9.146"	Up to 7"	5.000"	6.500"	.750"
10"	10.029"	10.146"	Up to 8"	5.000"	6.500"	.750"
11"	11.029"	11.146"	Up to 9"	5.000"	6.500"	.750"
12"	12.029"	12.146"	Up to 10"	5.000"	6.500"	.750"
Note: Thru bores machined .010" - .015" oversized unless otherwise specified						

Note: COR-LOK mechanical shafts are available with custom locking face lengths up to 16 inches. Diameters for non-standard and metric core sizes are available. Please contact us at 800-433-2413 for more information on custom locking face lengths and non-standard and metric core diameters.

Aluminum Cones

For inexpensive core locking

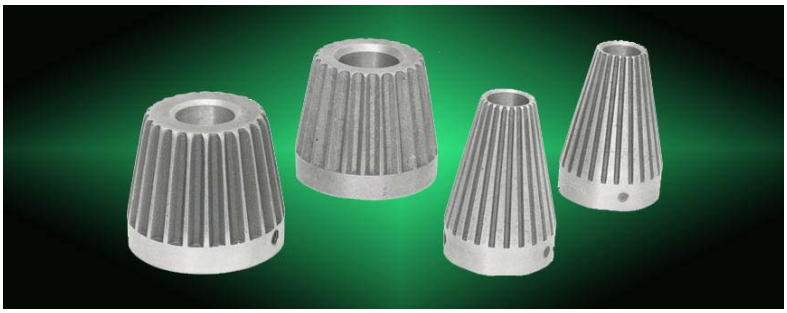

COR-LOK aluminum core cones are the answer where initial low cost and infrequent roll changes are important. **They work extremely well for crushed cores.** Core cones are bored to easily slide on your thru shaft. They include 2 set screws located 90 degrees apart to lock in place anywhere along your thru shaft. **Split bushings are optional to allow locking to your thru shaft without the set screws coming in contact with the shaft.**

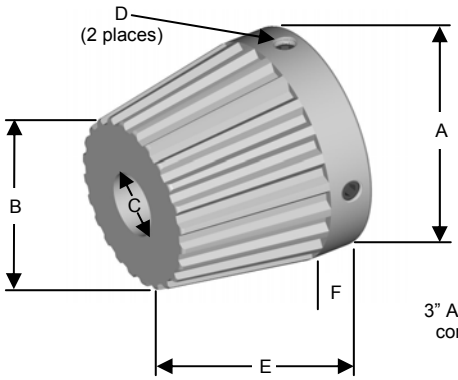

3" Aluminum core cone

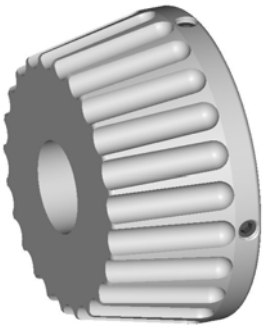

6" Aluminum core cone

Aluminum core cones						
To fit core size:	A	B	C	D	E	F
	Major diameter	Minor diameter	Bore range	Set screw	Over all length	Land
3"	3-3/8"	2-1/2"	Up to 2-1/4"	3/8-16	3-1/8"	5/8"
5"	5-3/8"	4-1/2"	Up to 4-1/4"	1/2-13	3-1/8"	5/8"
6"	6-3/8"	5-1/2"	Up to 5-1/4"	1/2-13	3-1/8"	5/8"
Note: Thru bores machined .010" - .015" oversized unless otherwise specified						

CONVERTER ACCESSORY CORPORATION
201 Alpha Road, Wind Gap, PA 18091-1279

•800-433-2413 •610-863-6008 •800-709-1007 FAX •610-863-7818 FAX
www.converteraccessory.com Email: cac@epix.net

Web Handling Technology . . . CAC Engineered and Manufactured