MODEL NO.	CURVE NO.	FLOW (CFM)	MAX. PRESSURE (INCH WATER)	MAX. VACUUM	SOUND LEVEL (db)	INLET / OUTLET NPT
700AB	A18	230	118	112	72	2.00"

PHASE	VOLTAGE	CURRENT	KW	HP	WEIGHT (LBS)
3	220-275/380-480	13.5Δ/7.8Y	3.7	5.00	75

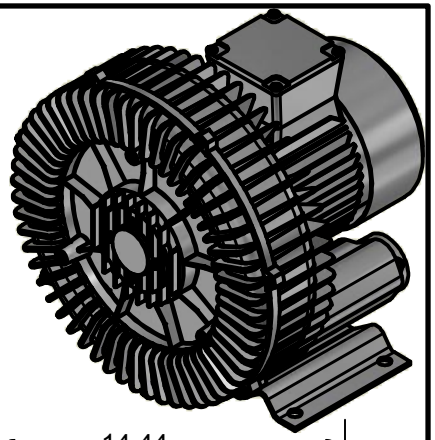

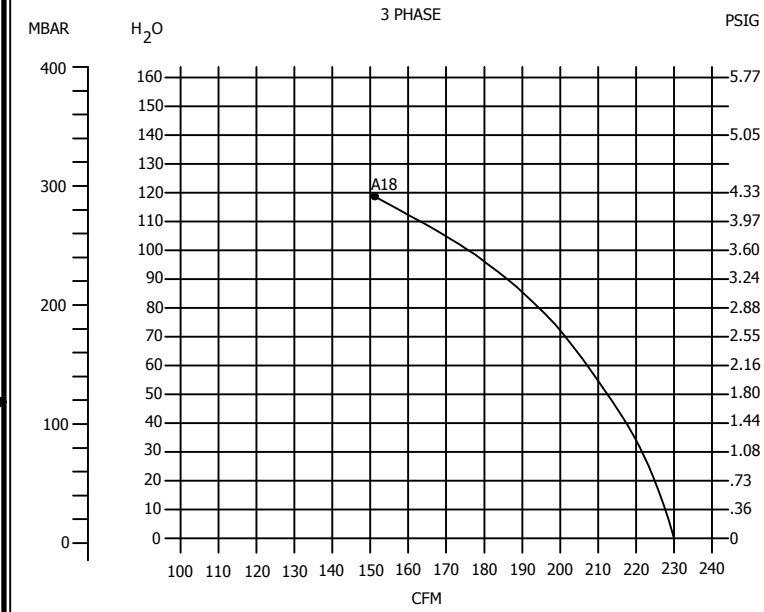

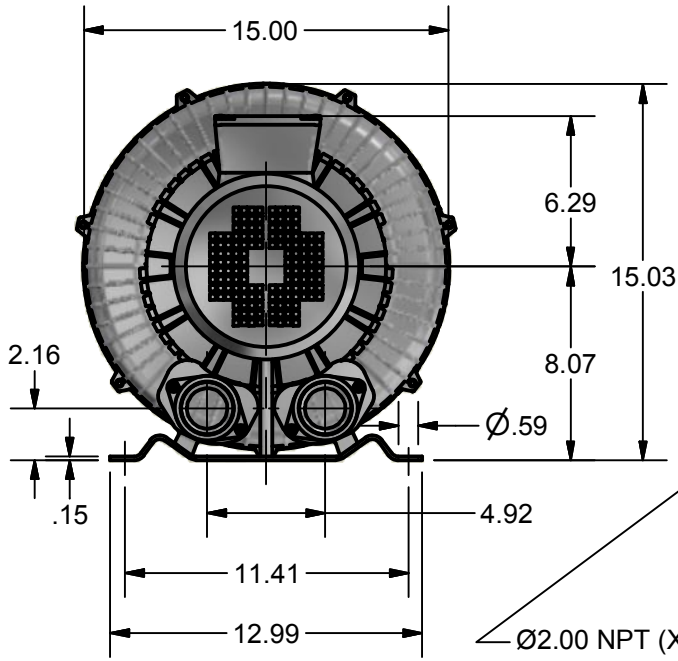

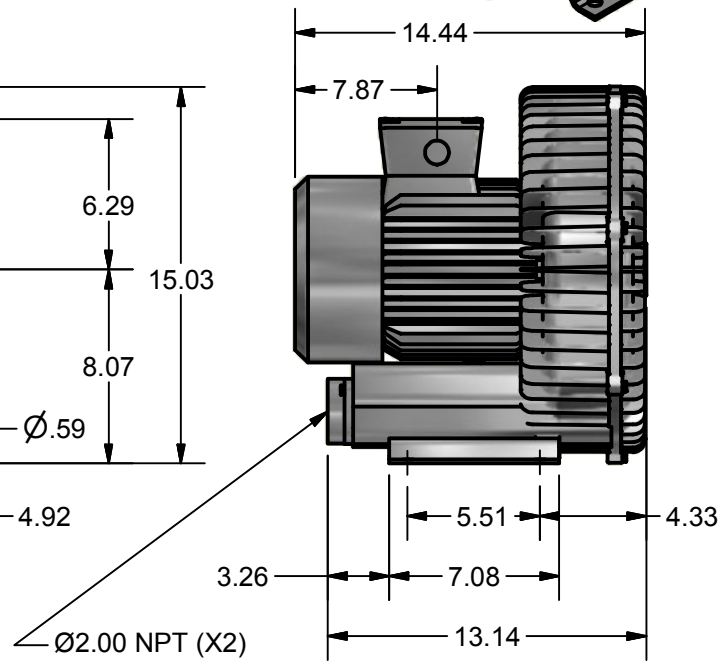

CUSTOMER:

APPROVED BY: DATE:

ACCESSORIES:	PART NO.
FILTER CANISTER:	20222-236
FILTER ELEMENT:	20222-237
SILENCER:	20222-229
ENCLOSED MOTOR STARTER (230V):	20222-260
ENCLOSED MOTOR STARTER (460V):	20222-261
VARIABLE FREQUENCY DRIVE (230V):	20222-262
VARIABLE FREQUENCY DRIVE (460V):	20222-263

NOTES:

SHOWN, PART#20222-224

THESE DRAWINGS AND SPECIFICATIONS CONTAIN INFORMATION WHICH CONVERTER ACCESSORY CORPORATION CONSIDERS PROPRIETARY AND CONFIDENTIAL.
NO PORTION OF THIS DRAWING MAY BE REPRODUCED OR COPIED WITHOUT PRIOR WRITTEN PERMISSION OF CONVERTER ACCESSORY CORPORATION.

CONVERTER ACCESSORY CORP.
WIND GAP, PA 18091
WWW.CONVERTERACCESSORY.COM

TITLE			
MODEL#700AB REGENERATIVE BLOWER			
SIZE: A	DWG NO: 18503-280		REV
DATE	DRAWN	FILE: MEMAST	QUOTE NO.