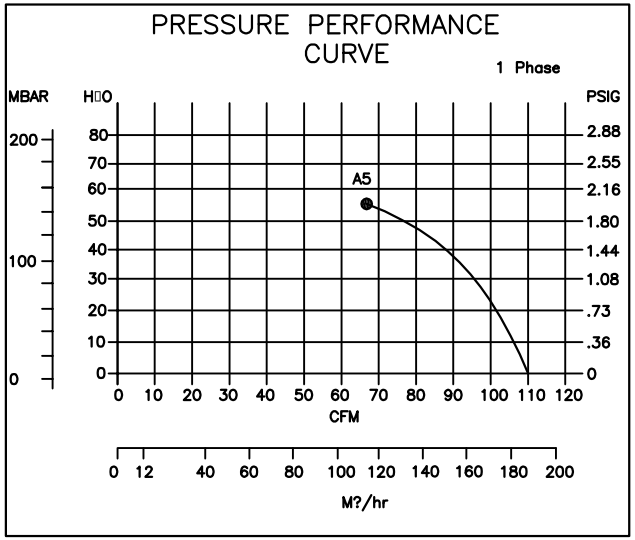

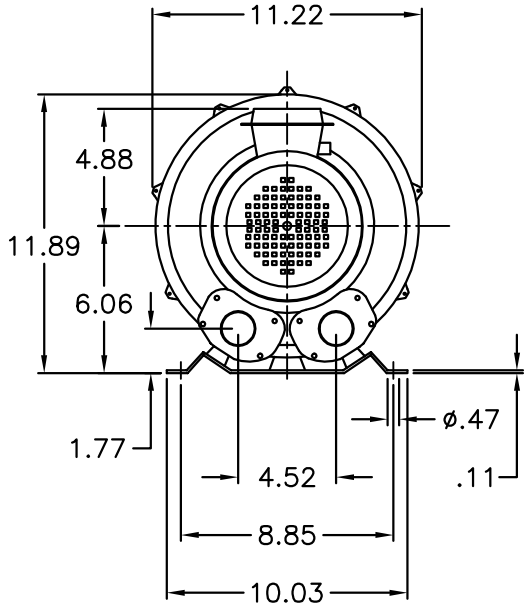

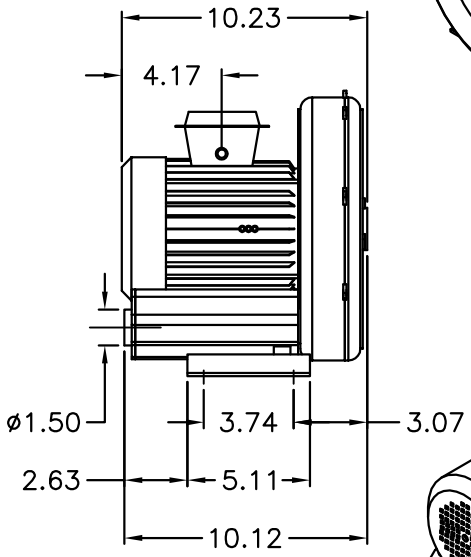

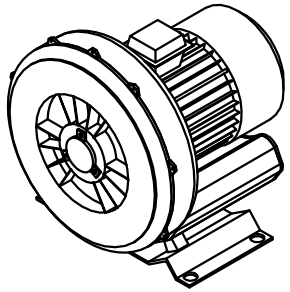

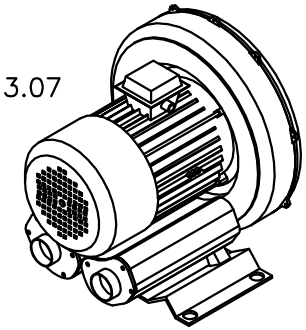

PHASE	MODEL NO.	CURVE NO.	KW	HP	FLOW (CFM)	MAXIMUM PRESSURE ("H_2O)	MAXIMUM VACUUM	SOUND LEVEL (DB)	INLET DIAMETER	VOLTAGE	CURRENT	WEIGHT (LBS)
1	350AB	A5	0.75	1.00	110	56	56	64	1.5"	110–120/220–240	13/6.5	35

ACCESSORIES:

FILTER CANISTER	PART NO.:20222–234
FILTER ELEMENT	PART NO.: 20222–235
SILENCER	PART NO.: 20222–228
ENCLOSED MOTOR STARTER (120V)	PART NO.: 20222–248
ENCLOSED MOTOR STARTER (240V)	PART NO.: 20222–249

SHOWN, PART#20222–220

THESE DRAWINGS AND SPECIFICATIONS CONTAIN INFORMATION WHICH CONVERTER ACCESSORY CORPORATION CONSIDERS PROPRIETARY AND CONFIDENTIAL. NO PORTION OF THIS DRAWING MAY BE REPRODUCED OR COPIED WITHOUT PRIOR WRITTEN PERMISSION OF CONVERTER ACCESSORY CORPORATION.

CUSTOMER:
APPROVED BY:
DATE:

CONVERTER ACCESSORY CORP.
WIND GAP, PA

SPECIFICATION SHEET

TITLE: MODEL#350AB REGENERATIVE BLOWER

DRAWN BY:	SCALE:	QUOTE NO.:
MJT	NONE	

DWG. NO.:	DISK FILE:
18503–276	MEMAST