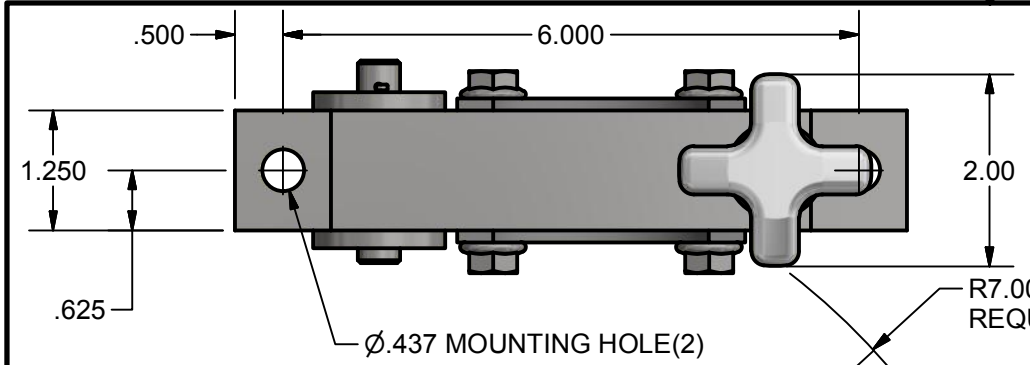

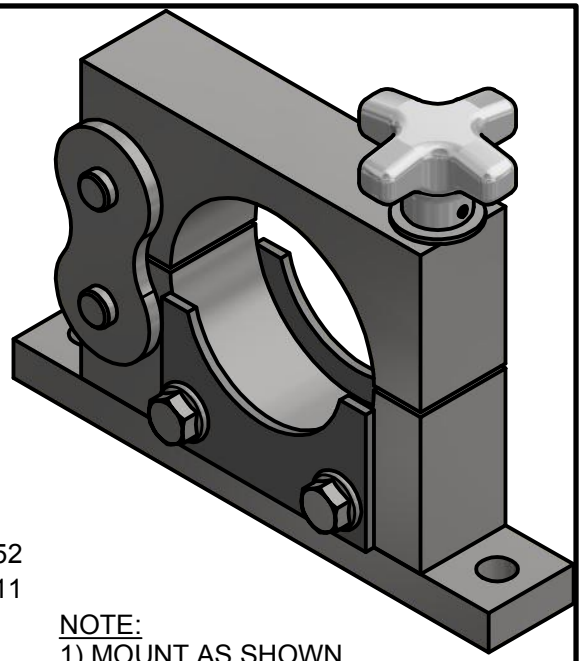

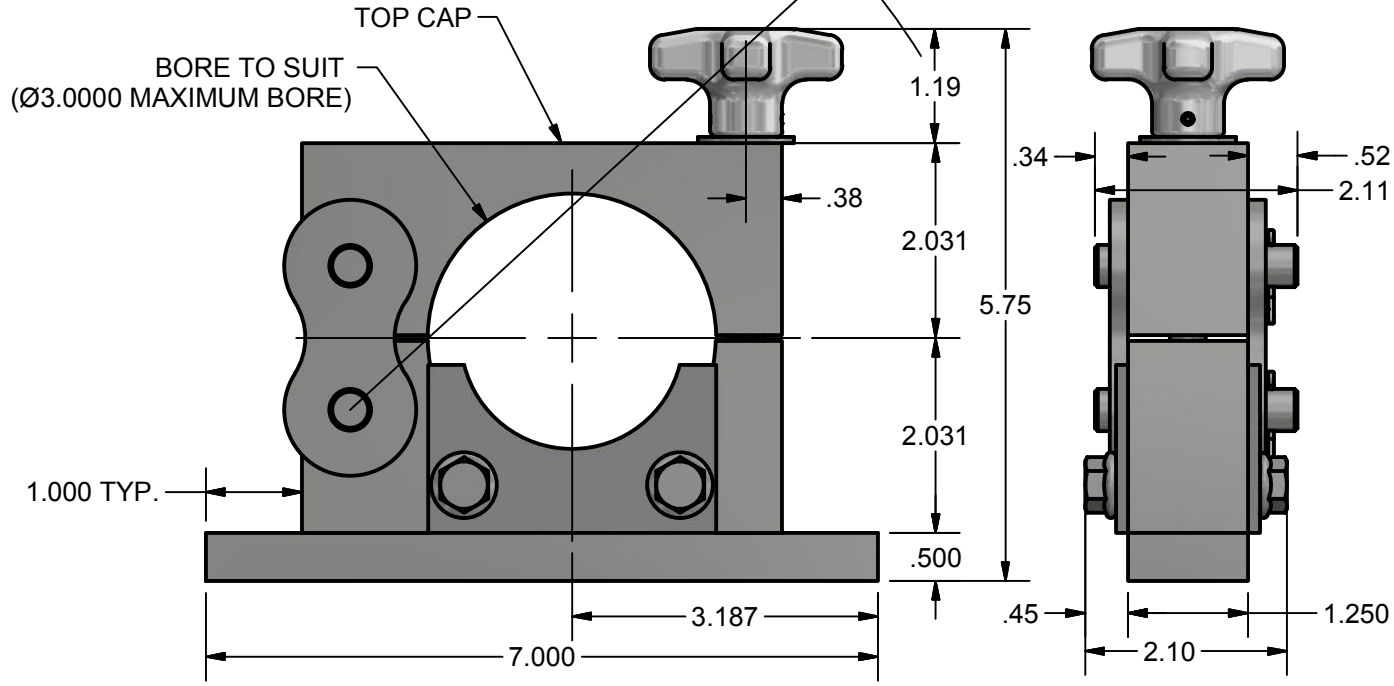

NOTE:
1) MOUNT AS SHOWN, HORIZONTAL WITH TOP CAP UP.
2) MAXIMUM LOAD CAPACITY 1250 LBS EACH / 2500 LBS PER PAIR
3) BORE SIZE REQUIRED:_____ (Ø3.0000 MAXIMUM)
4) _____

CUSTOMER:_____

APPROVED BY:_____ DATE:_____

OPERATING SPECIFICATIONS:

MACHINE:_____

MATERIAL:_____

THICKNESS: MIN._____ MAX._____

WIDTH: MIN._____ MAX._____

SPEED: MIN._____ MAX._____

TENSION: MIN._____ MAX._____

CORE SIZE:_____

MAXIMUM ROLL DIAMETER:_____

MAXIMUM ROLL WEIGHT:_____

PART NUMBER: 47266-12

THESE DRAWINGS AND SPECIFICATIONS CONTAIN INFORMATION WHICH CONVERTER ACCESSORY CORPORATION CONSIDERS PROPRIETARY AND CONFIDENTIAL.
NO PORTION OF THIS DRAWING MAY BE REPRODUCED OR COPIED WITHOUT PRIOR WRITTEN PERMISSION OF CONVERTER ACCESSORY CORPORATION.

CONVERTER ACCESSORY CORP.
WIND GAP, PA 18091
WWW.CONVERTERACCESSORY.COM

TITLE: SIMPLOK MEDIUM DUTY SHAFT HOLDER WITH FLANGE

SIZE	DWG NO	REV
A	18503-320	

DATE	DRAWN	FILE	QUOTE NO.
		MEMAST	