OPTIONAL MOUNTING BLOCKS:
☐ STANDARD FOOT MOUNTING
☐ FLANGE MOUNTING BLOCK
☐ NONE
QUANTITY REQUIRED:_____

OPTIONAL TAPPED ENDS:
☐ ONE END
☐ BOTH ENDS
TAP SIZE:_____X_____DEEP
☐ NONE

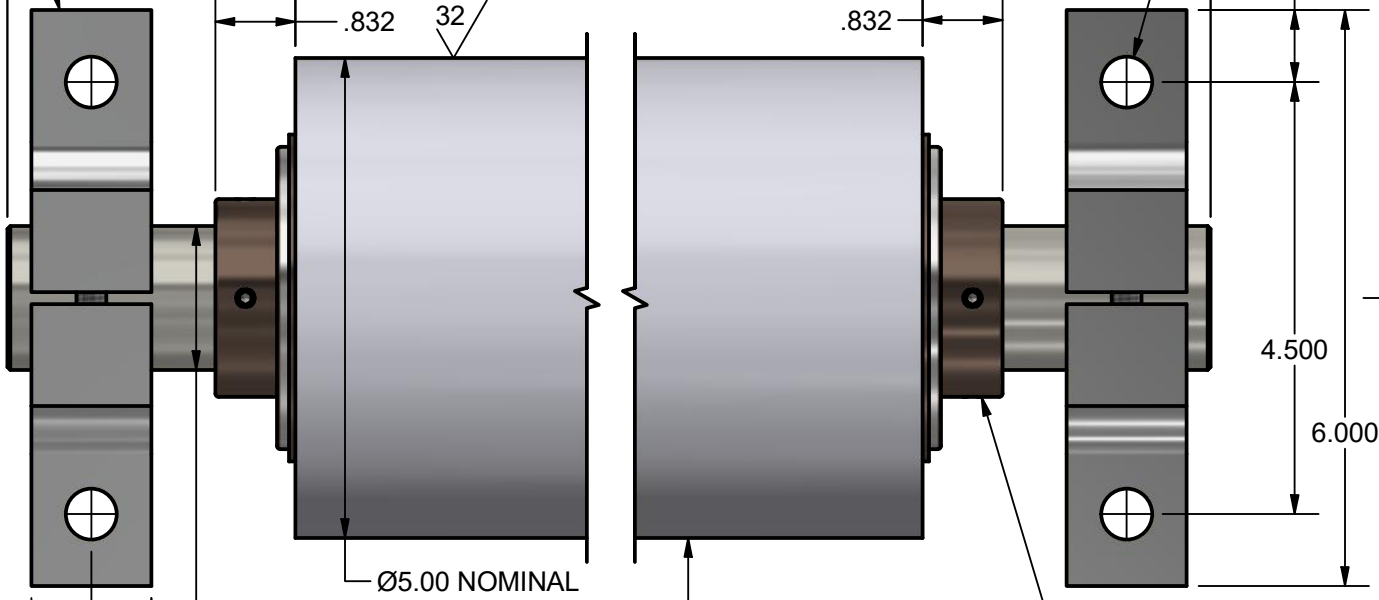

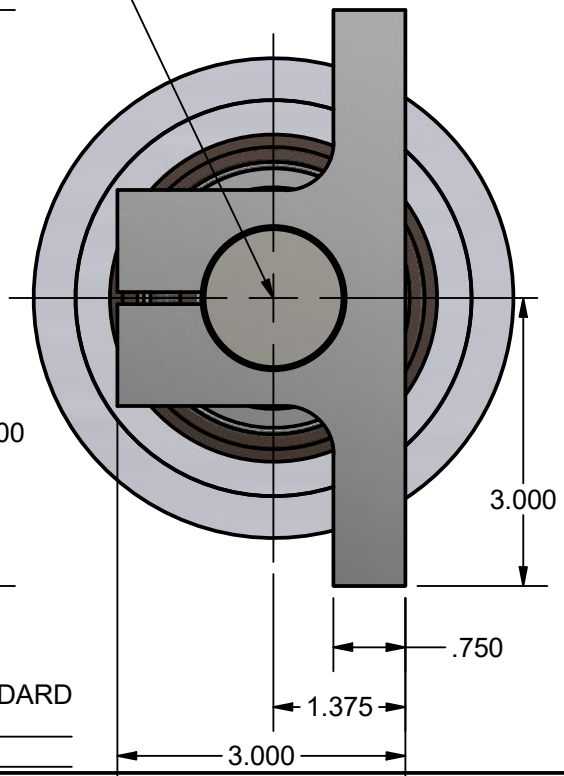

CUSTOMER:_____
APPROVED BY:_____
DATE:_____

THESE DRAWINGS AND SPECIFICATIONS CONTAIN INFORMATION WHICH CONVERTER ACCESSORY CORPORATION CONSIDERS PROPRIETARY AND CONFIDENTIAL. NO PORTION OF THIS DRAWING MAY BE REPRODUCED OR COPIED WITHOUT PRIOR WRITTEN PERMISSION OF CONVERTER ACCESSORY CORPORATION.

ROLLER MATERIAL:
☐ 6061-T6 ALUMINUM TUBING 1/2" WALL
☐ OTHER:_____

ROLLER QUANTITY REQUIRED:_____
THRU SHAFT MATERIAL:
☐ COMMON STEEL
☐ OTHER:_____

NOTES:_____

OPERATING SPECIFICATIONS:
MATERIAL:_____
THICKNESS: MIN._____ MAX._____
WIDTH: MIN._____ MAX._____
SPEED: MIN._____ MAX._____
TENSION: MIN._____ MAX._____

CONVERTER ACCESSORY CORP.
WIND GAP, PA 18091
WWW.CONVERTERACCESSORY.COM

TITLE
5 INCH DIAMETER ALUMINUM DEAD SHAFT IDLER ROLL

SIZE	DWG NO	REV
A	18503-366	

DATE	DRAWN	FILE	QUOTE NO.
		MEMAST	