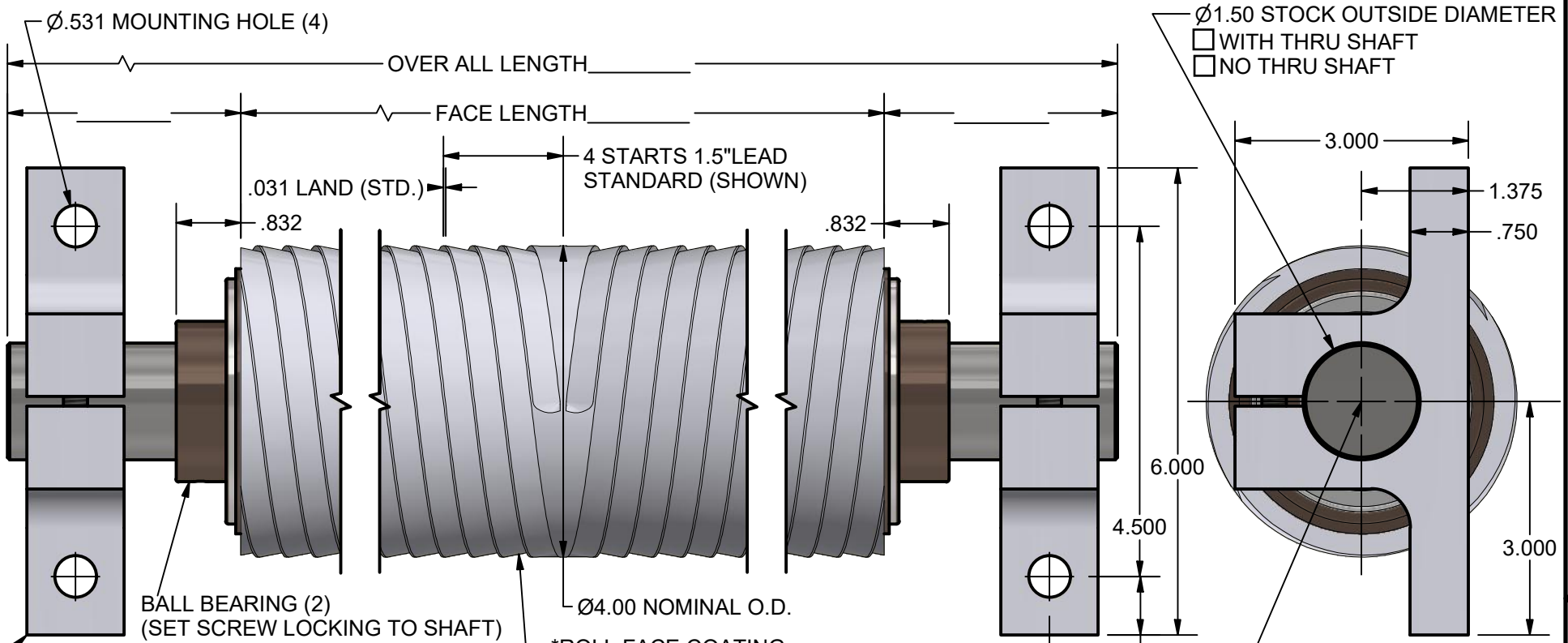

OPTIONAL MOUNTING BLOCKS:
- ☐ STANDARD FOOT MOUNTING
- ☐ FLANGE MOUNTING BLOCK
- ☐ NONE

QUANTITY REQUIRED:_____

*ROLL FACE COATING:
- ☐ NONE
- ☐ ANODIZE:_____
- ☐ PLASMA COATING
- ☐ TEFLON COATING
- ☐ OTHER:_____

OPTIONAL TAPPED ENDS:
- ☐ ONE END
- ☐ BOTH ENDS

TAP SIZE:_____
TAP DEPTH:_____
- ☐ NONE

CUSTOMER:_____
APPROVED BY:_____
DATE:_____

ROLLER MATERIAL:
- ☐ 6061-T6 ALUMINUM TUBING 1/2" WALL
- ☐ OTHER:_____

QUANTITY OF ROLLERS REQUIRED:_____
THRU SHAFT MATERIAL:
- ☐ COMMON STEEL
- ☐ OTHER:_____

*COATING FINISH WILL BE MILL SPEC.

OPERATING SPECIFICATIONS:
MATERIAL:_____
THICKNESS: MIN._____ MAX._____
WIDTH: MIN._____ MAX._____
SPEED: MIN._____ MAX._____
TENSION: MIN._____ MAX._____

NOTES:_____

THESE DRAWINGS AND SPECIFICATIONS CONTAIN INFORMATION WHICH CONVERTER ACCESSORY CORPORATION CONSIDERS PROPRIETARY AND CONFIDENTIAL. NO PORTION OF THIS DRAWING MAY BE REPRODUCED OR COPIED WITHOUT PRIOR WRITTEN PERMISSION OF CONVERTER ACCESSORY CORPORATION.

CONVERTER ACCESSORY CORP.
WIND GAP, PA 18091
WWW.CONVERTERACCESSORY.COM

TITLE
4 INCH DIAMETER ALUMINUM SCROLL ROLL
DEAD SHAFT ROLLER

SIZE	DWG NO	REV
A	18503-389	

DATE	DRAWN	FILE	QUOTE NO.
		MEMAST	