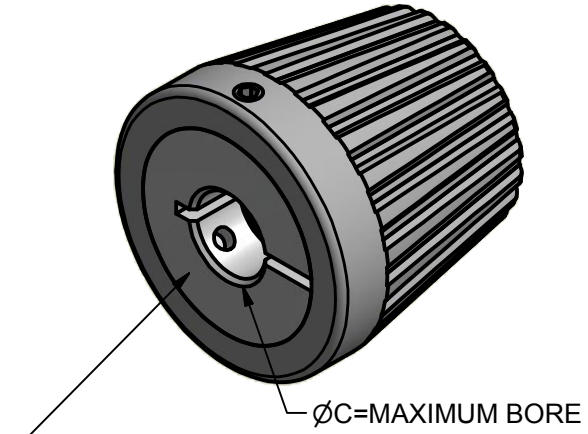

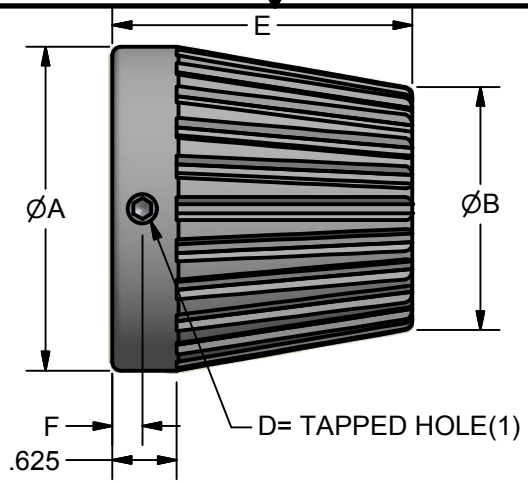

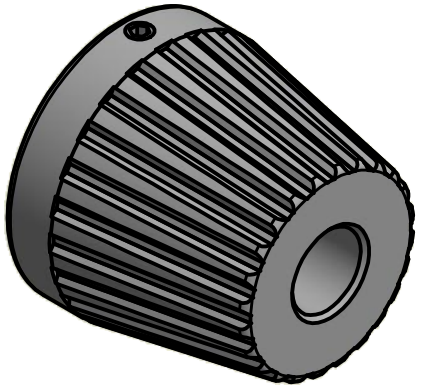

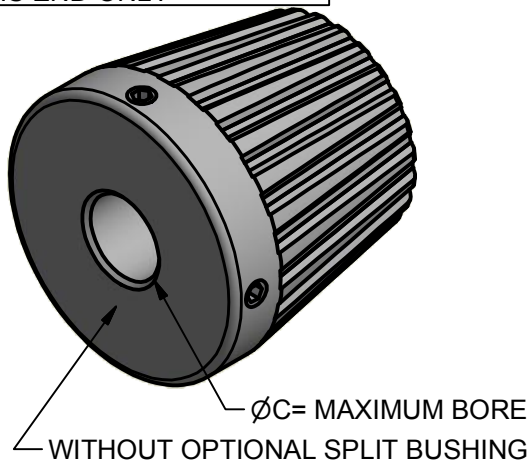

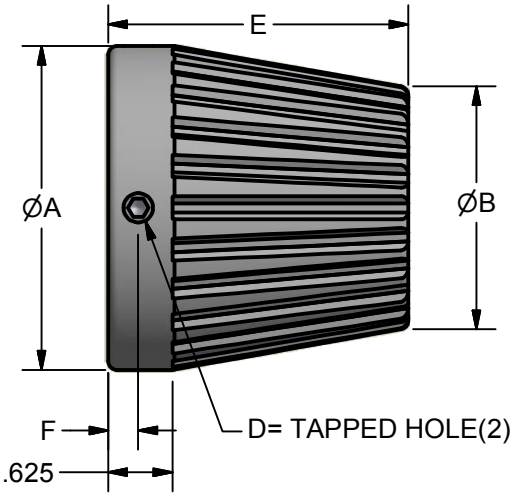

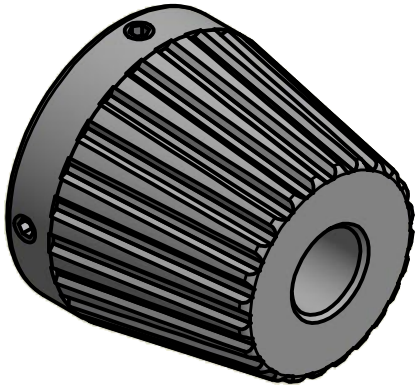

CUSTOMER:_____

APPROVED BY:_____

DATE:_____

☐ NO BORE
☐ PLAIN THRU BORE_____SIZE
☐ SPLIT BUSHING DESIGN_____SIZE

CORE I.D.		
DIMENSION	3" ☐	6" ☐
A	3.375	6.500
B	2.500	5.500
C	2.250	5.250
D	3/8-16	1/2-13
E	3.000	3.125
F	.312	.500

NOTES:_____

OPERATING SPECIFICATIONS:
MACHINE:_____
MATERIAL:_____
THICKNESS: MIN._____MAX._____
WIDTH: MIN._____MAX._____
SPEED: MIN._____MAX._____
TENSION: MIN._____MAX._____
CORE SIZE: I.D._____ O.D._____
CORE MATERIAL:_____
MAXIMUM ROLL DIAMETER:_____
MAXIMUM ROLL WEIGHT:_____
☐UNWIND ☐ REWIND

THESE DRAWINGS AND SPECIFICATIONS CONTAIN INFORMATION WHICH CONVERTER ACCESSORY CORPORATION CONSIDERS PROPRIETARY AND CONFIDENTIAL. NO PORTION OF THIS DRAWING MAY BE REPRODUCED OR COPIED WITHOUT PRIOR WRITTEN PERMISSION OF CONVERTER ACCESSORY CORPORATION.

CONVERTER ACCESSORY CORP.
WIND GAP, PA 18091
WWW.CONVERTERACCESSORY.COM

TITLE
COR-LOK®
ALUMINUM CORE CONE

SIZE	DWG NO	REV
A	18503-94B	

DATE	DRAWN	FILE	QUOTE NO.
		MEMAST	